4-4. SS-87 (SYSTEM CONTROL, SPINDLE SERVO), SW-138 (TRAY END SWITCH), DUS-127 (LOADING MOTOR), DUS-129 (DISC/SIZE SENSOR) PRINTED WIRING BOARDS

– Ref. No. SS-87 BOARD: 3,000 series, SW-138, DUS-127, DUS-129 BOARDS: 3,500 series –

Note:

- ● ○— : indicates a lead wire mounted on the component side.
- ● ●— : indicates a lead wire mounted on the printed side.

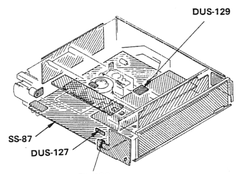

CN1	A-5	D1	D-5	E201	B-7	Q1	D-5	Q309	D-10
CN2	A-3	D201	E-11			Q2	D-5	Q310	C-9
CN3	D-4	D202	C-10	IC1	C-4	Q203	D-9	Q311	B-5
CN4	A-1	D204	A-9	IC2	C-6	Q211	D-11		
CN5	B-2	D205	B-11	IC3	D-6	Q212	B-9	TP1	C-7
CN6	B-2	D206	B-11	IC4	B-2	Q213	D-12	TP11	D-2
CN7	C-2	D208	C-12	IC5	E-3	Q214	D-10	TP12	D-2
CN8	C-2	D209	A-11	IC201	C-11	Q215	B-10	TP201	A-8
CN9	C-2	D210	B-12	IC203	B-8	Q303	D-8		
CN10	E-5	D211	B-12	IC204	B-9	Q304	D-8		
CN11	D-5	D301	D-9	IC205	D-11	Q305	D-9		
CN12	E-1	D302	D-9	IC206	A-12	Q306	D-9		
		D303	D-10	IC207	C-9	Q307	D-10		
		D304	B-9	IC301	B-8	Q308	D-10		
				IC302	C-8				

SS-87 BOARD

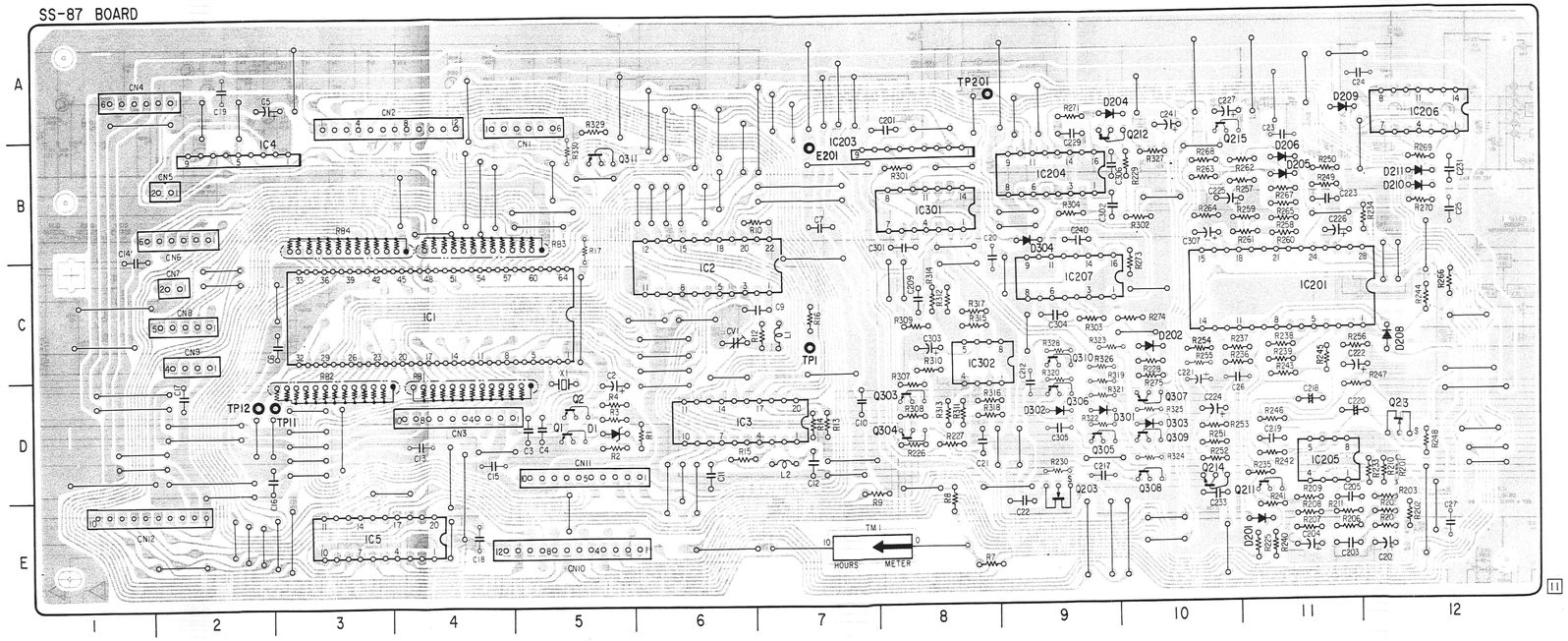

SW-138 BOARD

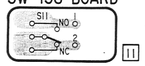

DUS-127 BOARD

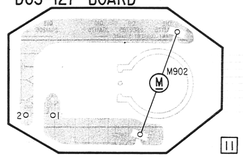

DUS-129 BOARD

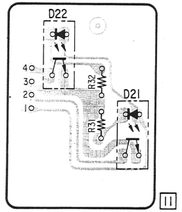

SYSTEM CONTROL, SERVO SYSTEM CONTROL, SERVO

SS-87 (SYSTEM CONTROL, SPINDLE SERVO), SW-138 (TRAY END SWITCH), DUS-127 (LOADING MOTOR), DUS-129 (DISC/SIZE SENSOR) SCHEMATIC DIAGRAM

– Ref. No. SS-87 BOARD: 3,000 series, SW-138, DUS-127, DUS-129 BOARDS: 3,500 series –

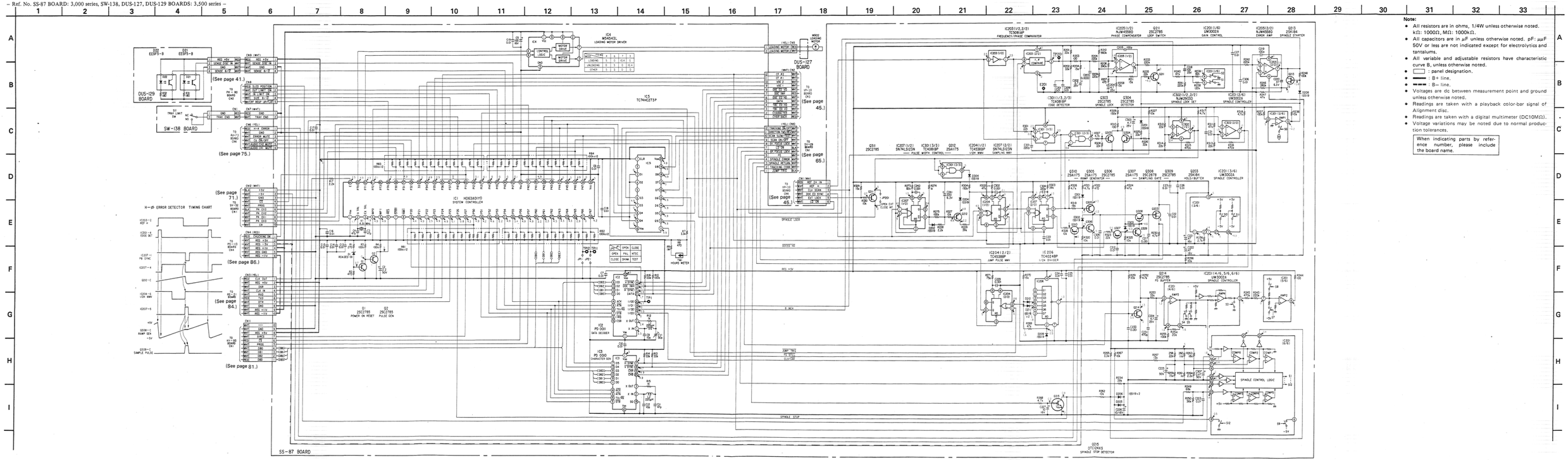

Note:

- All resistors are in ohms, 1/4W unless otherwise noted. kΩ: 1000Ω, MΩ: 1000kΩ.
- All capacitors are in μF unless otherwise noted. pF: μμF 50V or less are not indicated except for electrolytics and tantalums.
- All variable and adjustable resistors have characteristic curve B, unless otherwise noted.
- ▭ : panel designation.
- ▬▬ : B+ line.
- ▬▬▬ : B− line.
- Voltages are dc between measurement point and ground unless otherwise noted.
- Readings are taken with a playback color-bar signal of Alignment disc.
- Readings are taken with a digital multimeter (DC10MΩ).
- Voltage variations may be noted due to normal production tolerances.

When indicating parts by reference number, please include the board name.

4-5. SV-29 (FOCUS, TRACKING, SLIDE SERVO) PRINTED WIRING BOARD

– Ref. No. SV-29 BOARD: 4,000 series –

Note:
- ●—○— : indicates a lead wire mounted on the component side.
- ●—●— : indicates a lead wire mounted on the printed side.

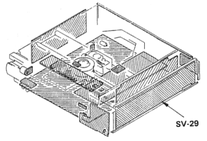

CN1	D-7	D101	A-2	Q1	B-6	Q18	A-5
CN2	D-8	D102	B-3	Q3	A-13	Q19	A-8
CN3	D-6	D103	A-3	Q4	A-13	Q101	B-1
CN4	D-4	D104	C-1	Q5	C-10	Q102	A-2
CN5	D-5	D105	C-1	Q6	A-6	Q103	B-2
CN6	A-8	D106	A-2	Q7	C-10	Q104	B-2
CN7	A-8			Q8	B-10	Q105	C-1
		E1	C-5	Q9	A-11	Q106	C-1
D1	B-6			Q10	A-4	Q107	D-1
D2	A-6	IC1	B-8	Q11	A-4	Q108	C-2
D3	D-10	IC3	A-11	Q12	C-3	Q109	C-3
D4	A-13	IC4	A-5	Q13	B-3	Q110	A-1
D5	A-13	IC5	C-9	Q14	A-3	Q111	A-1
D6	A-12	IC101	B-1	Q15	B-3	Q112	A-2
D7	D-10	IC102	A-2	Q16	B-9	Q113	D-3
D8	C-10	IC103	C-2	Q17	B-6		
D9	B-7					RV1	A-12
D10	A-8					RV2	A-12
D11	A-7					RV101	B-1
D12	A-8						
						TP1	B-7
						TP2	B-8
						TP3	B-4
						TP4	B-10

SERVO SERVO

SV-29 BOARD

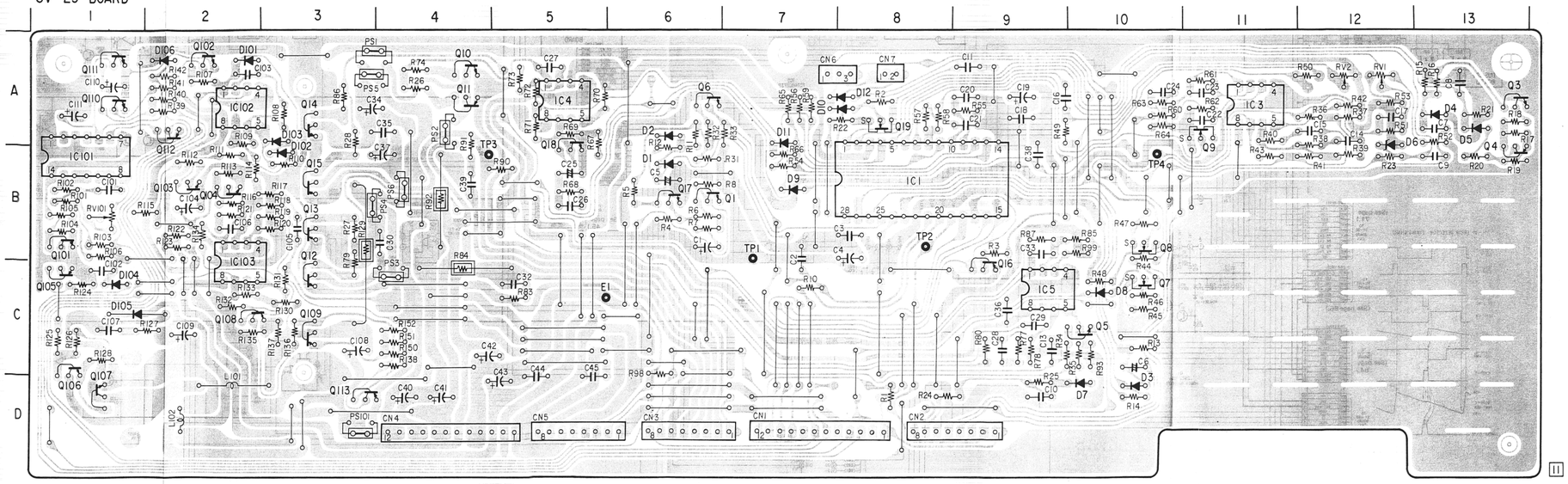

SV-29 (FOCUS, TRACKING, SLIDE SERVO) SCHEMATIC DIAGRAM

– Ref. No. SV-29 BOARD: 4,000 series –

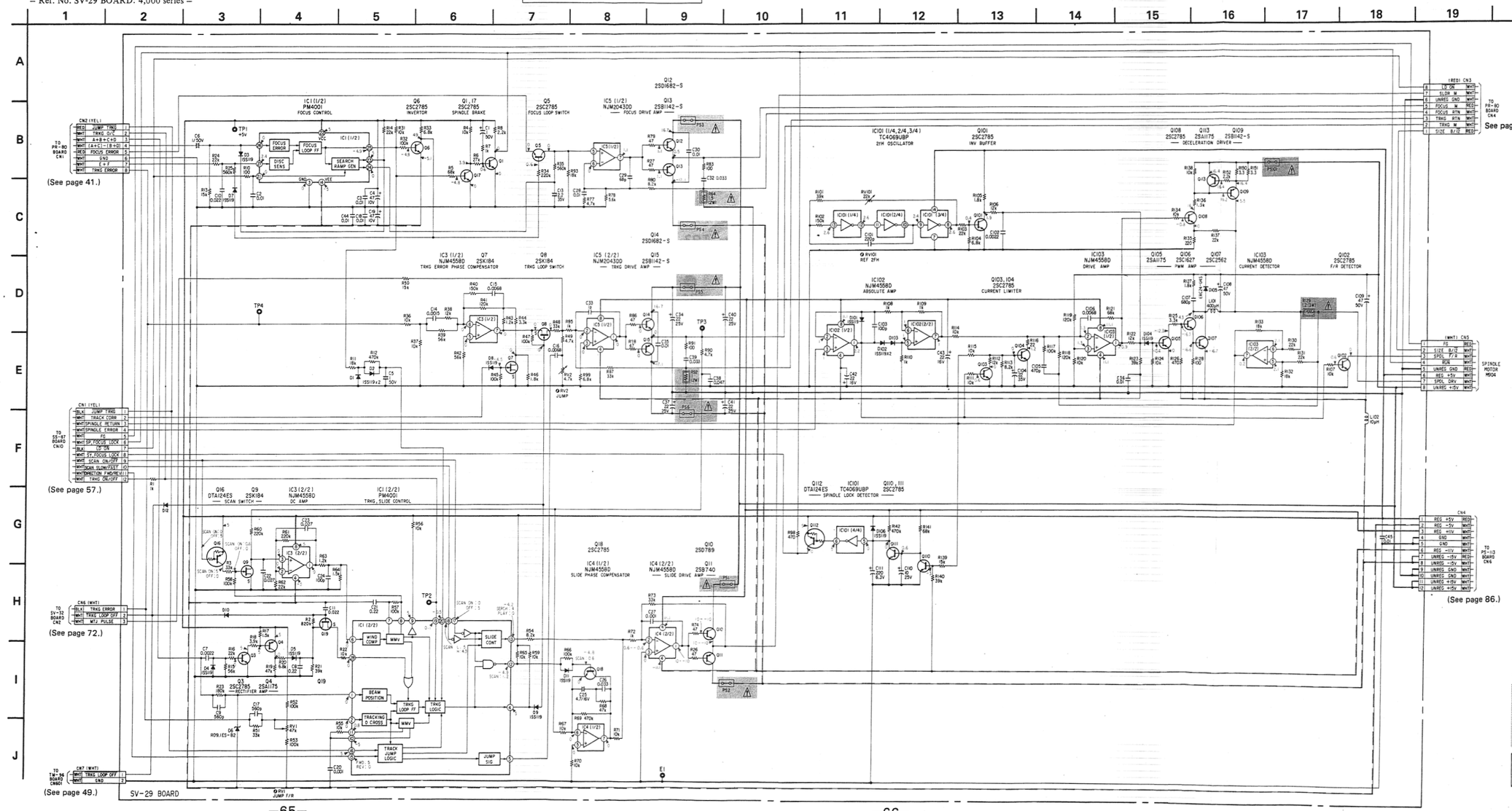

Note:

- All resistors are in ohms, 1/4W unless otherwise noted. kΩ: 1000Ω, MΩ: 1000kΩ.
- All capacitors are in μF unless otherwise noted. pF: μμF 50V or less are not indicated except for electrolytics and tantalums.
- All variable and adjustable resistors have characteristic curve B, unless otherwise noted.
- ▭ : nonflammable resistor.
- ▭ : panel designation.
- ▬ : B+ line.
- ▬ : B− line.
- Voltages are dc between measurement point and ground unless otherwise noted.
- Readings are taken with a playback color-bar signal of Alignment disc.
- Readings are taken with a digital multimeter (DC10MΩ).
- Voltage variations may be noted due to normal production tolerances.

Note: The components identified by shading and mark ⚠ are critical for safety. Replace only with part number specified.

Note: Les composants identifiés par un tramé et une marque ⚠ sont critiques pour la sécurité. Ne les remplacer que par une pièce portant le numéro spécifié.

When indicating parts by reference number, please include the board name.

4-6. SV-32 (MULTI TRACK JUMP CONTROL) PRINTED WIRING BOARD

– Ref. No. SV-32 BOARD: 7,000 series –

SV-32 BOARD

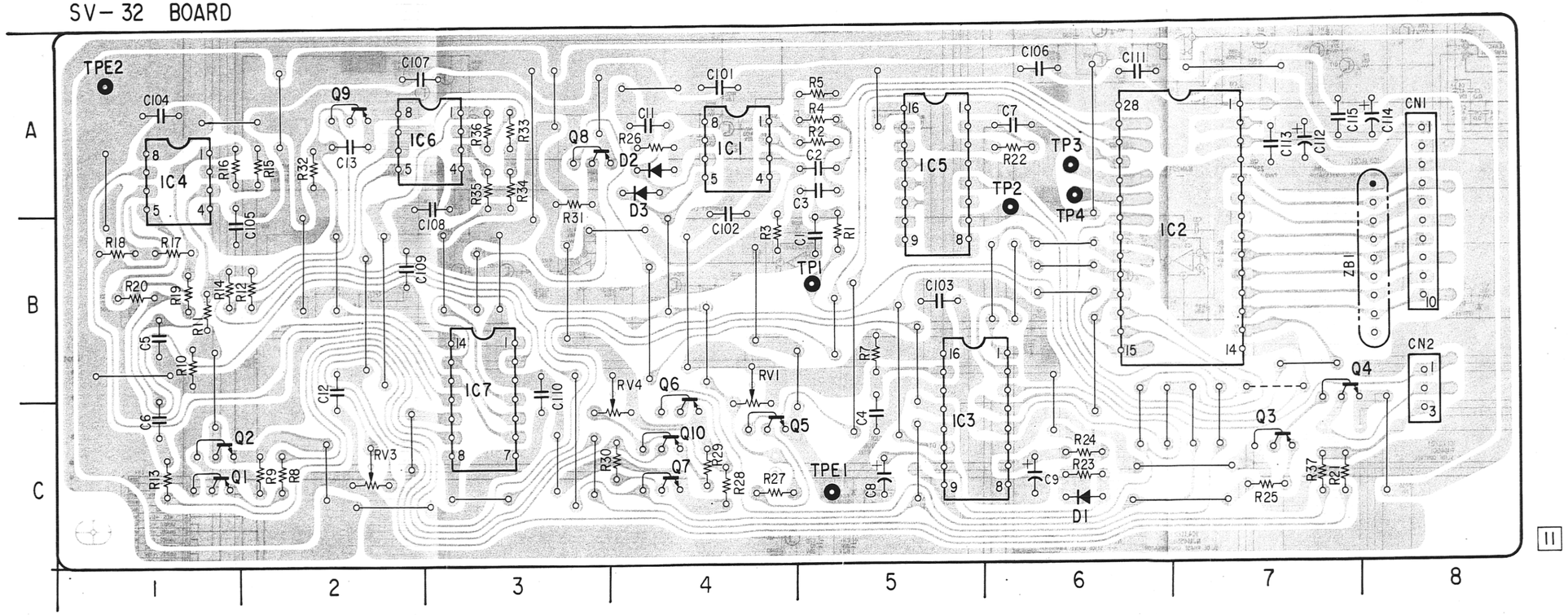

CN1	A-8
CN2	B-8
D1	C-6
D2	A-4
D3	A-4
IC 1	A-4
IC 2	B-7
IC 3	C-5
IC 4	A-1
IC 5	A-5
IC 6	A-2
IC 7	B-3
Q1	C-1
Q2	C-1
Q3	C-7
Q4	C-7
Q5	C-4
Q6	C-4
Q7	C-4
Q8	A-3
Q9	A-2
Q10	C-4
RV1	B-4
RV3	C-2
RV4	C-3
TP1	B-5
TP2	A-6
TP3	A-6
TP4	A-6
TPE1	C-5
TPE2	A1

Note:
- ●○— : indicates a lead wire mounted on the component side.
- ●●— : indicates a lead wire mounted on the printed side.

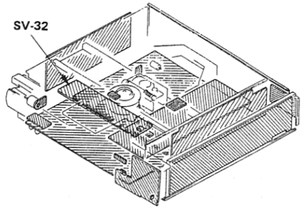

SV-32 (MULTI TRACK JUMP CONTROL) SCHEMATIC DIAGRAM

– Ref. No. SV-32 BOARD: 7,000 series –

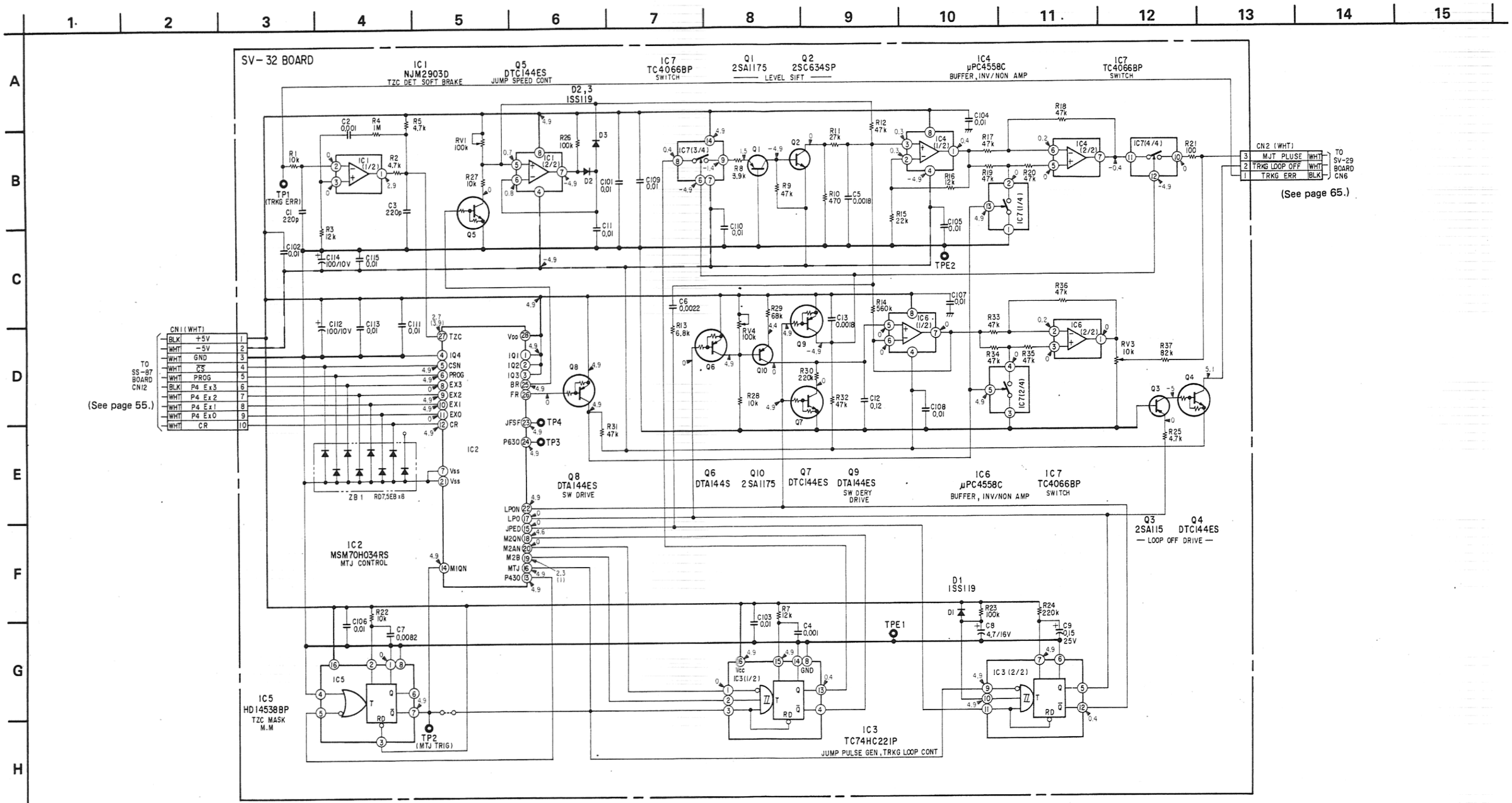

Note:

- All resistors are in ohms, 1/4W unless otherwise noted. kΩ: 1000Ω, MΩ: 1000kΩ.
- All capacitors are in μF unless otherwise noted. pF: μμF 50V or less are not indicated except for electrolytics and tantalums.
- All variable and adjustable resistors have characteristic curve B, unless otherwise noted.
- ▬▬ : B+ line.
- ▬▬ : B− line.
- Voltages are dc between measurement point and ground unless otherwise noted.
- Readings are taken with a playback color-bar signal of Alignment disc.
- Readings are taken with a digital multimeter (DC10MΩ).
- Voltage variations may be noted due to normal production tolerances.

When indicating parts by reference number, please include the board name.

4-7. AU-73 (AUDIO SYSTEM), HP-25 (HEADPHONES) PRINTED WIRING BOARDS

– Ref. No. AU-73 BOARD: 8,000 series, HP-25 BOARD: 2,500 series –

Note:

- ○— : indicates a lead wire mounted on the component side.
- ●— : indicates a lead wire mounted on the printed side.

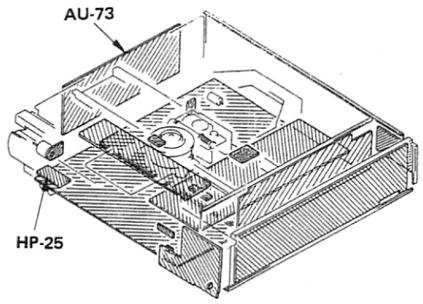

HP-25 BOARD

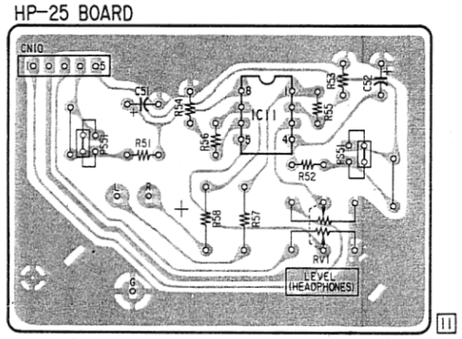

AU-73 BOARD

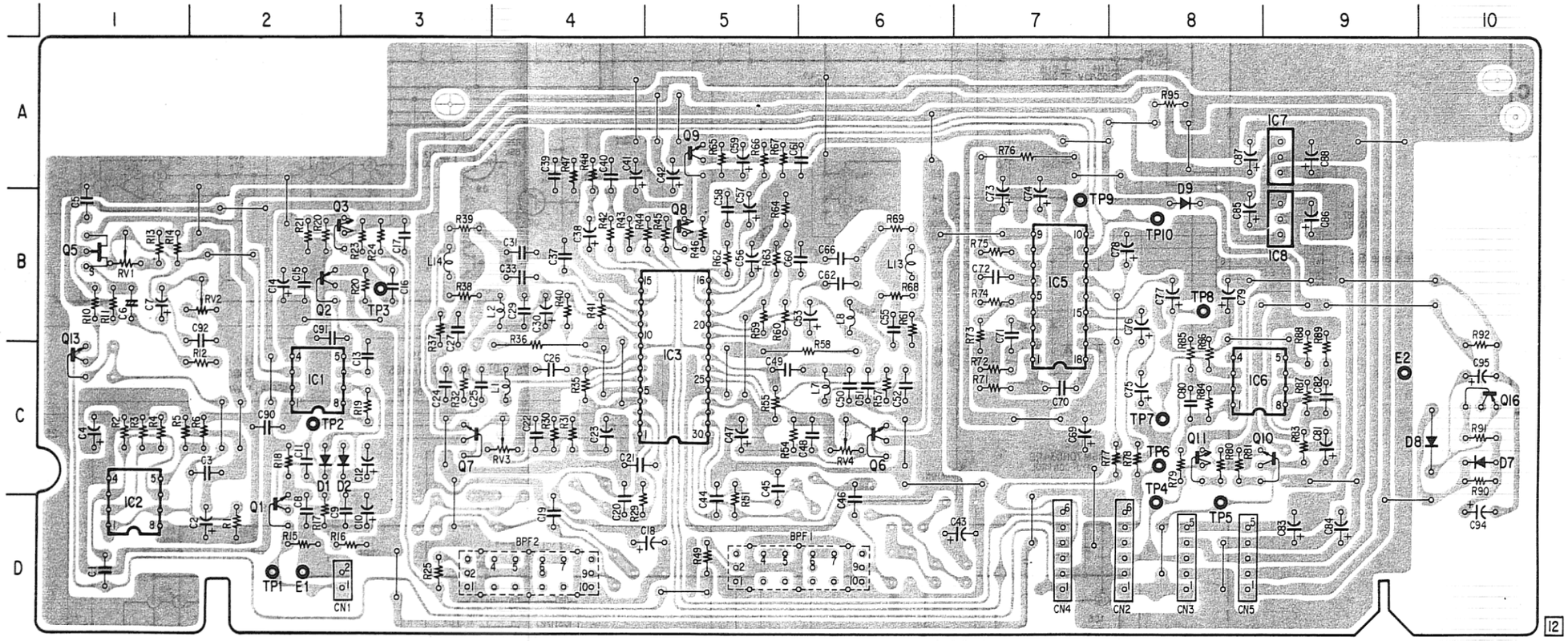

CN1	D·3	Q1	D·2
CN2	D·8	Q2	B·2
CN3	D·8	Q3	B·2
CN4	D·7	Q5	B·1
CN5	D·8	Q6	C·6
		Q7	C·3
D1	C·2	Q8	B·5
D2	C·3	Q9	A·5
D7	C·10	Q10	C·9
D8	C·10	Q11	C·8
D9	A·7	Q13	C·1
		Q16	C·10
E1	D·2		
E2	C·9	RV1	B·1
		RV2	B·2
IC1	C·2	RV3	C·4
IC2	D·1	RV4	C·6
IC3	C·5		
IC5	B·7	TP1	D·2
IC6	C·8	TP2	C·2
IC7	A·9	TP3	B·3
IC8	B·9	TP4	C·8
		TP5	D·8
		TP6	C·8
		TP7	C·8
		TP8	B·8
		TP9	B·7
		TP10	B·8

AU-73 (AUDIO SYSTEM), HP-25 (HEADPHONES) SCHEMATIC DIAGRAM

– Ref. No. AU-73 BOARD: 8,000 series, HP-25 BOARD: 2,500 series –

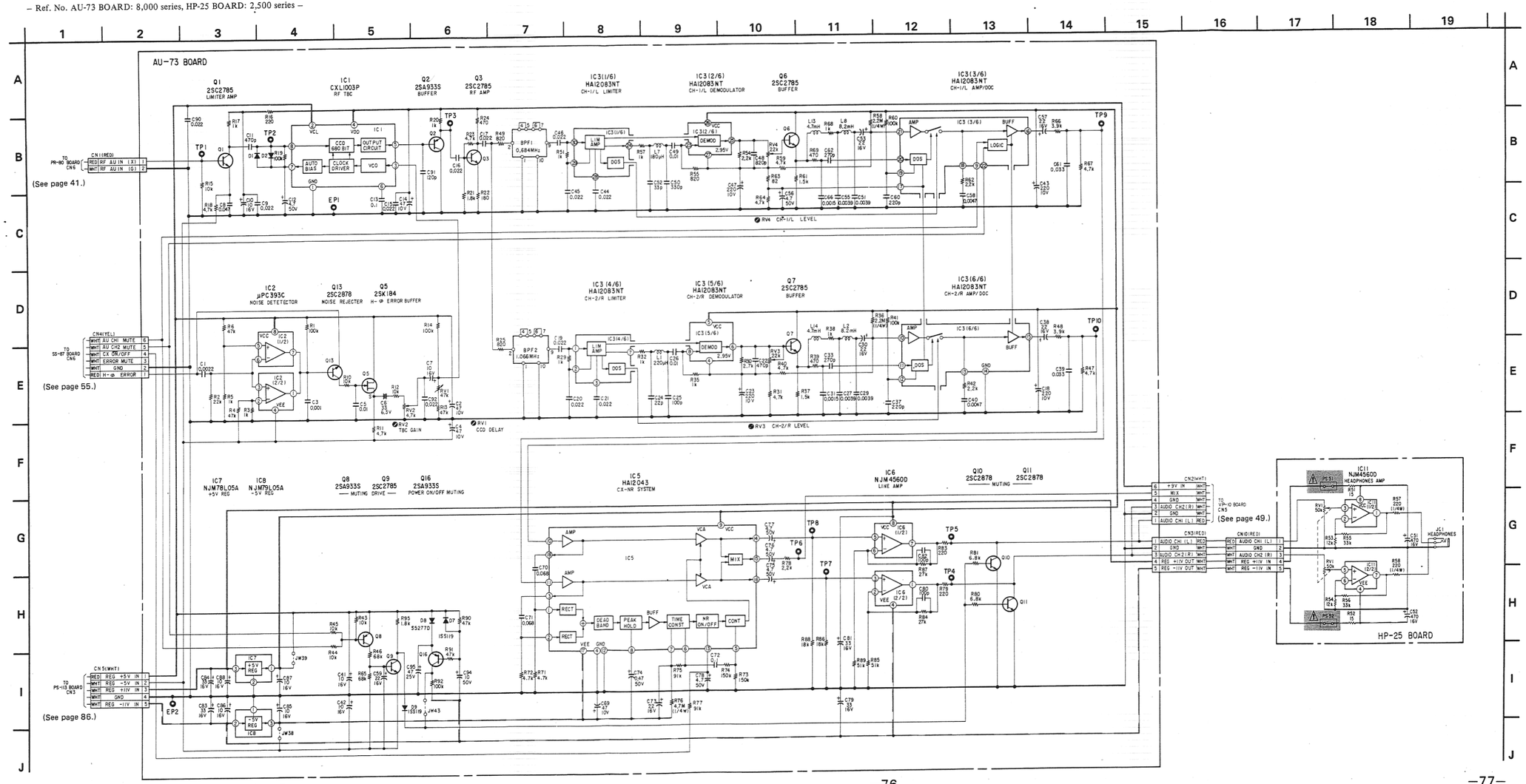

Note:

- All resistors are in ohms, 1/4W unless otherwise noted. kΩ: 1000Ω, MΩ: 1000kΩ.
- All capacitors are in μF unless otherwise noted. pF: μμF 50V or less are not indicated except for electrolytics and tantalums.
- All variable and adjustable resistors have characteristic curve B, unless otherwise noted.
- ▭ : panel designation.
- ▬▬ : B+ line.
- ▬▬ : B– line.
- Voltages are dc between measurement point and ground unless otherwise noted.
- Readings are taken with a playback color-bar signal of Alignment disc.
- Readings are taken with a digital multimeter (DC10MΩ).
- Voltage variations may be noted due to normal production tolerances.

Note: The components identified by shading and mark ⚠ are critical for safety. Replace only with part number specified.

Note: Les composants identifiés par un tramé et une marque ⚠ sont critiques pour la sécurité. Ne les remplacer que par une pièce portant le numéro spécifié.

When indicating parts by reference number, please include the board name.

4-8. KY-93 (CONTROL PANEL), SW-127 (OPEN/CLOSE BUTTON), DUS-128 (RELAY), PD-31 (REMOTE RECEIVER) PRINTED WIRING BOARDS

– Ref. No. KY-93 BOARD: 5,000 series, SW-127, DUS-128, PD-31 BOARDS: 5,200 series –

Note:

- ○— : indicates a lead wire mounted on the component side.
- ●— : indicates a lead wire mounted on the printed side.

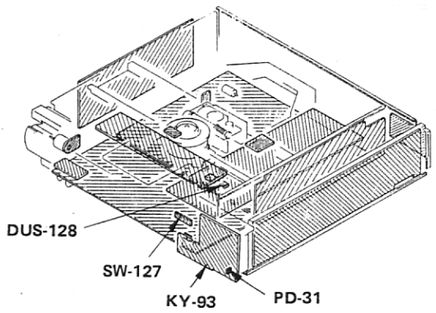

CN1	C-6	IC1	C-5
CN2	C-6	IC2	C-1
CN3	B-1		
		Q1	C-3
D1	C-2	Q2	C-3
D2	D-2	Q3	C-3
D3	A-2	Q4	B-3
D4	B-2		
D5	C-2	TP1	C-5
D6	C-2	TP2	C-4
D7	C-4		
D8	C-4		
E1	B-2		
E2	C-4		

KY-93 BOARD

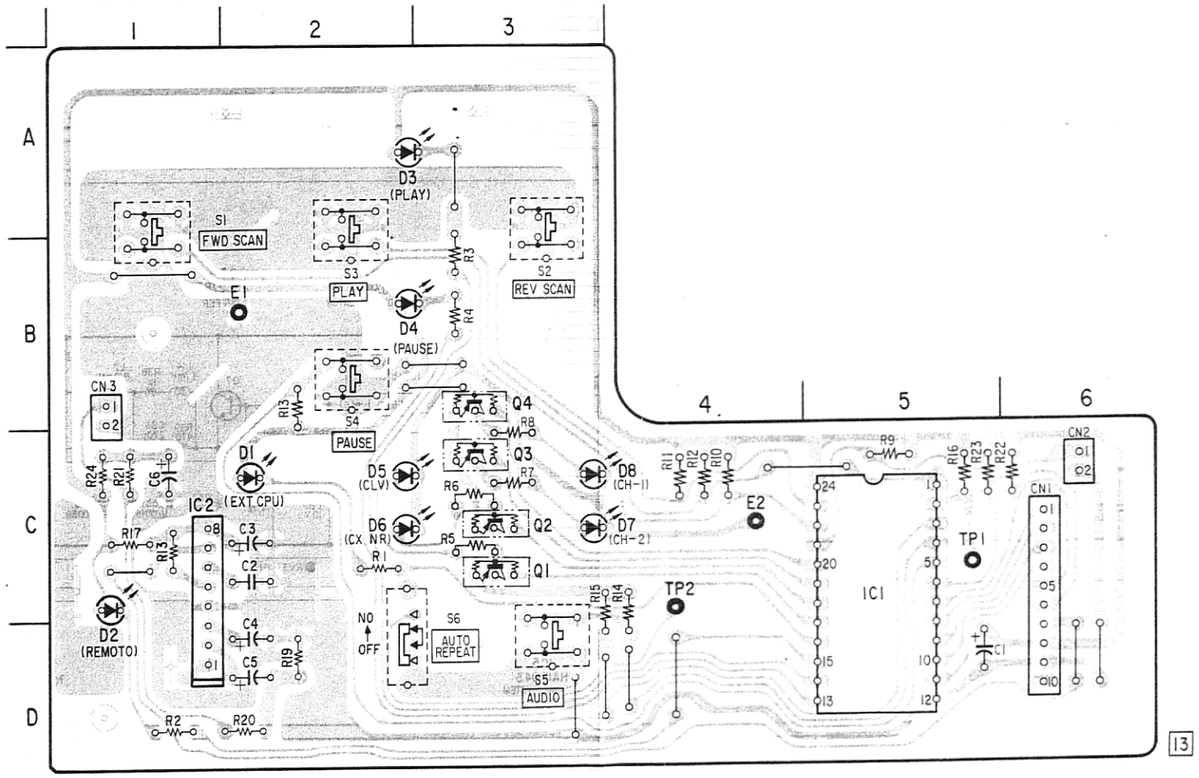

SW-127 BOARD

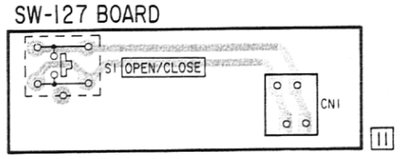

DUS-128 BOARD

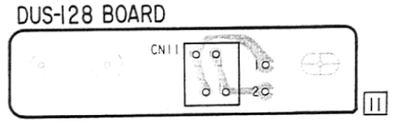

PD-31 BOARD

LDP-1550P FRONT/KEY

KY-93 (CONTROL PANEL), SW-127 (OPEN/CLOSE BUTTON), DUS-128 (RELAY), PD-31 (REMOTE RECEIVER) SCHEMATIC DIAGRAM

– Ref. No. KY-93 BOARD: 5,000 series, SW-127, DUS-128, PD-31 BOARDS: 5,200 series –

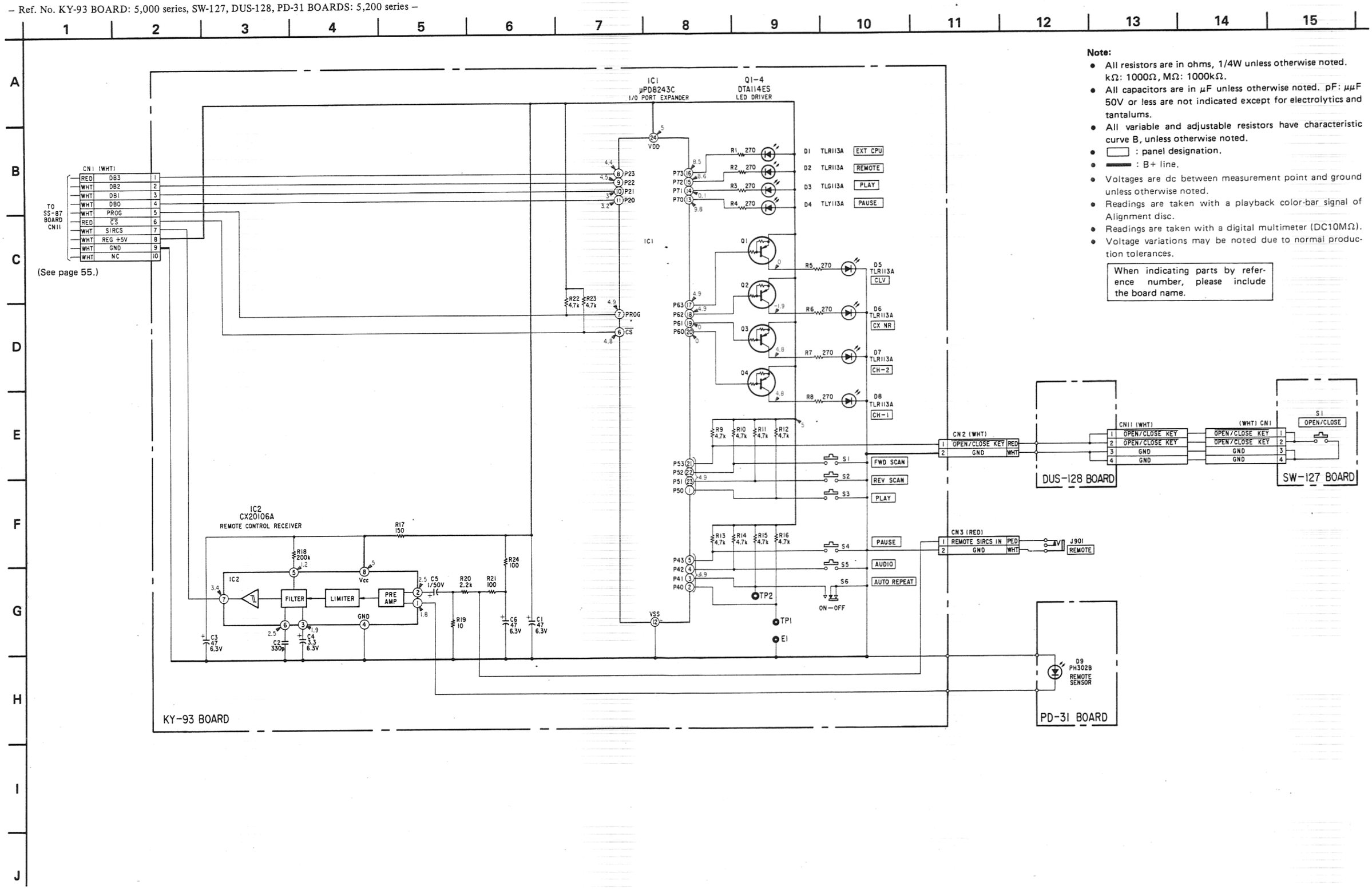

Note:

- All resistors are in ohms, 1/4W unless otherwise noted. kΩ: 1000Ω, MΩ: 1000kΩ.
- All capacitors are in μF unless otherwise noted. pF: μμF 50V or less are not indicated except for electrolytics and tantalums.
- All variable and adjustable resistors have characteristic curve B, unless otherwise noted.
- ▭ : panel designation.
- ▬ : B+ line.
- Voltages are dc between measurement point and ground unless otherwise noted.
- Readings are taken with a playback color-bar signal of Alignment disc.
- Readings are taken with a digital multimeter (DC10MΩ).
- Voltage variations may be noted due to normal production tolerances.

When indicating parts by reference number, please include the board name.

4-9. RS-21 (RS-232C INTERFACE), PS-113 (POWER SUPPLY), DUS-130 (CHUCK SENSOR) PRINTED WIRING BOARDS AND SCHEMATIC DIAGRAM

– Ref. No. RS-21 BOARD: 6,100 series, PS-113 BOARD: 6,200 series, DUS-130 BOARD: 6,500 series –

Note:

- All resistors are in ohms, 1/4W unless otherwise noted. kΩ: 1000Ω, MΩ: 1000kΩ.
- All capacitors are in μF unless otherwise noted. pF: μμF 50V or less are not indicated except for electrolytics and tantalums.
- All variable and adjustable resistors have characteristic curve B, unless otherwise noted.
- ▭ : nonflammable resistor.
- ▬▬ : B+ line.
- ▬▬ : B− line.
- Voltages are dc between measurement point and ground unless otherwise noted.
- Readings are taken with a playback color-bar signal of Alignment disc.
- Readings are taken with a digital multimeter (DC10MΩ)
- Voltage variations may be noted due to normal production tolerances.

When indicating parts by reference number, please include the board name.

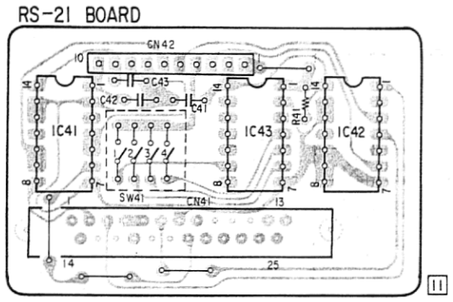

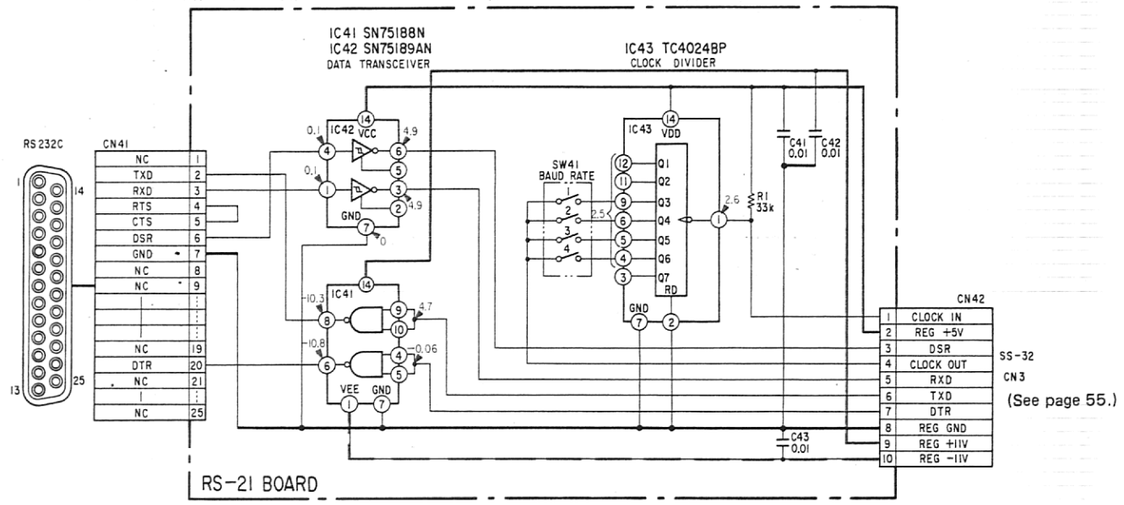

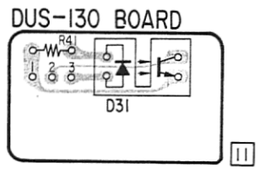

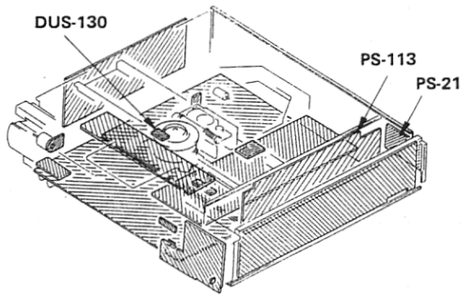

CN2	C-7	Q1	B-11
CN3	C-7	Q3	C-11
CN4	C-8	Q4	B-11
CN5	C-8	Q5	A-11
CN6	C-11	Q6	A-8
CN7	A-11	Q7	B-8
CN10	B-1		
CN11	A-1	RV1	A-10
D1	A-5	TP1	B-11
D2	B-5	TP2	B-11
D3	C-5	TP4	B-11
D4	A-7	TP5	B-11
D6	B-8	TP6	A-11
D7	B-8	TP7	A-7
D11	A-8	TP8	C-11
D13	A-10		
IC1	A-9		
IC2	C-9		

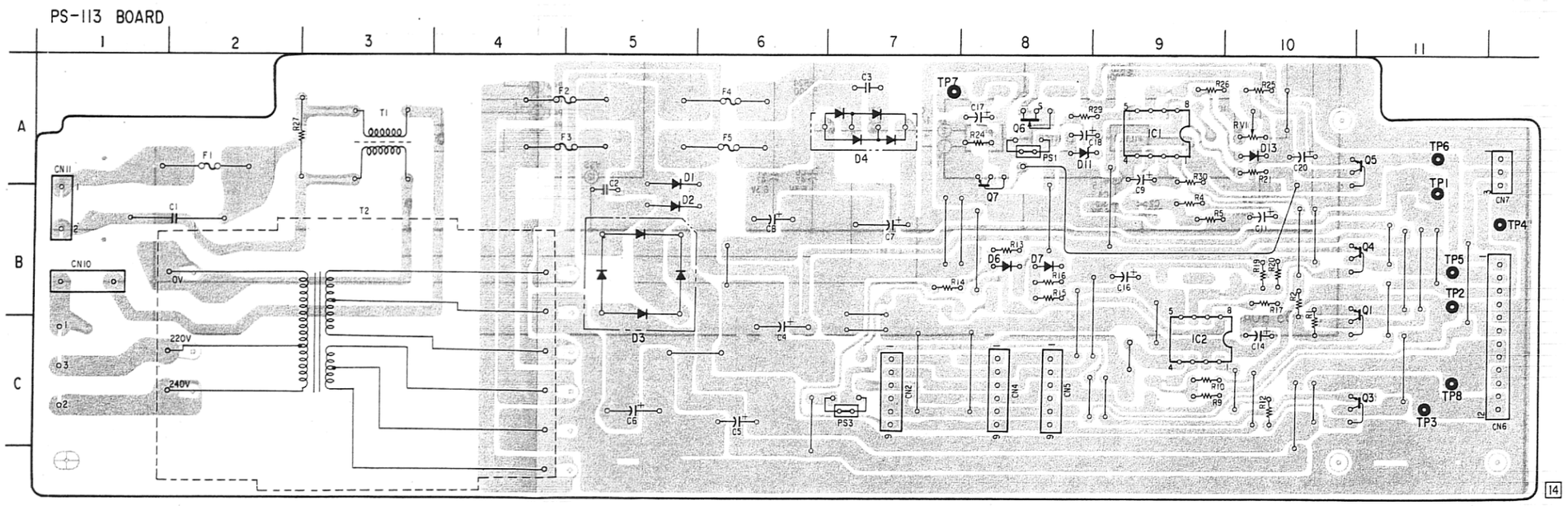

PS-113 (POWER SUPPLY), DUS-130 (CHUCK SENSOR) SCHEMATIC DIAGRAM

– Ref. No. PS-113 BOARD: 6,200 series, DUS-130 BOARD: 6,500 series –

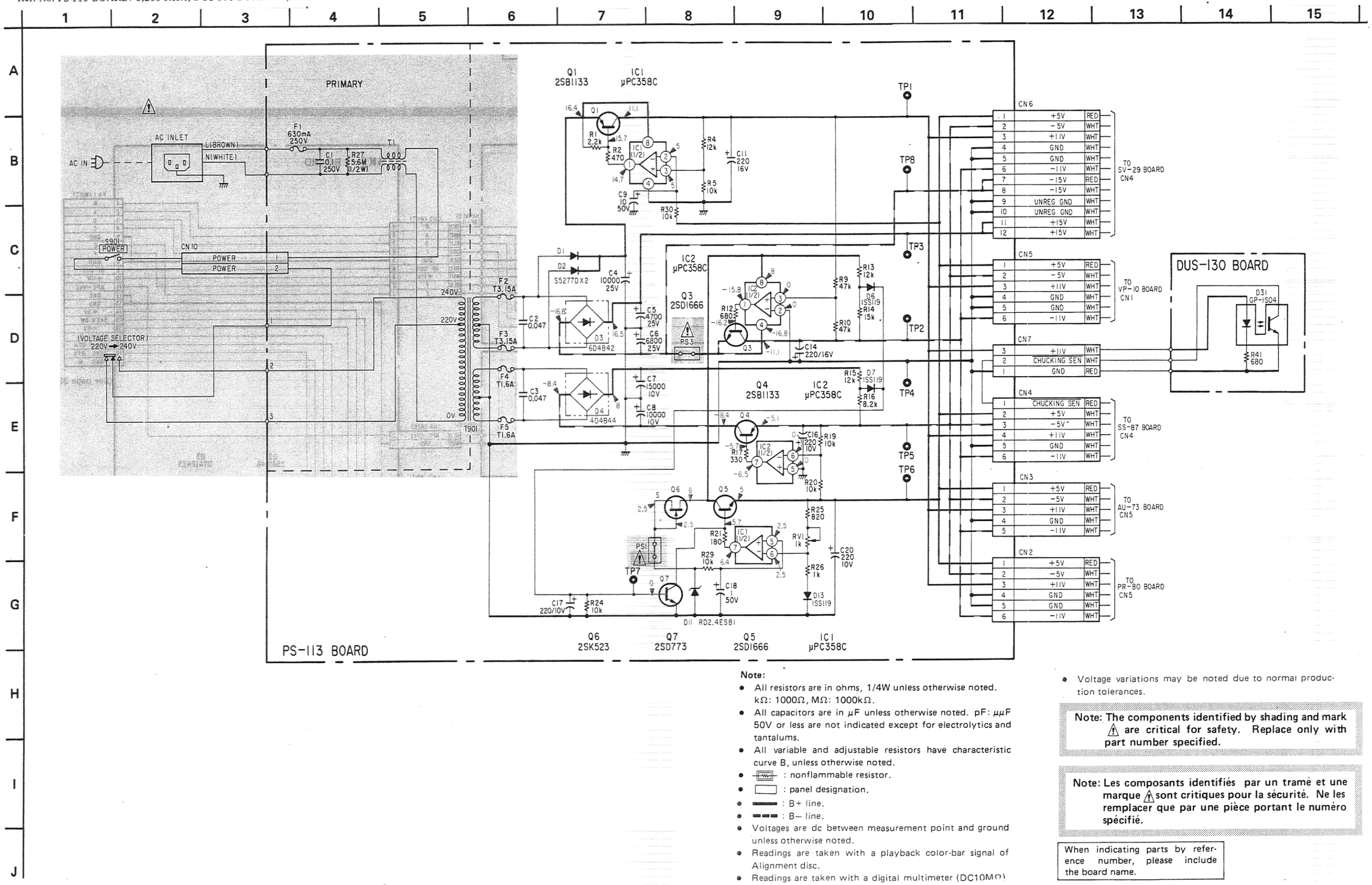

Note:

- All resistors are in ohms, 1/4W unless otherwise noted. kΩ: 1000Ω, MΩ: 1000kΩ.
- All capacitors are in μF unless otherwise noted. pF: μμF 50V or less are not indicated except for electrolytics and tantalums.
- All variable and adjustable resistors have characteristic curve B, unless otherwise noted.
- ▭ : nonflammable resistor.
- ▭ : panel designation.
- ▬ : B+ line.
- ▬ : B− line.
- Voltages are dc between measurement point and ground unless otherwise noted.
- Readings are taken with a playback color-bar signal of Alignment disc.
- Readings are taken with a digital multimeter (DC10MΩ)
- Voltage variations may be noted due to normal production tolerances.

Note: The components identified by shading and mark ⚠ are critical for safety. Replace only with part number specified.

Note: Les composants identifiés par un tramé et une marque ⚠ sont critiques pour la sécurité. Ne les remplacer que par une pièce portant le numéro spécifié.

When indicating parts by reference number, please include the board name.

4-10. OPTICAL BLOCK (KSS-141B): PP-21, SKS-1, SKS-2, AP-13, C MOTOR SCHEMATIC DIAGRAM

Note: The components identified by shading and mark ⚠ are critical for safety. Replace only with part number specified.

Note: Les composants identifiés par un tramé et une marque ⚠ sont critiques pour la sécurité. Ne les remplacer que par une pièce portant le numéro spécifié.

When the optical block is defective, replace as a block.
Cannot replace as a part.

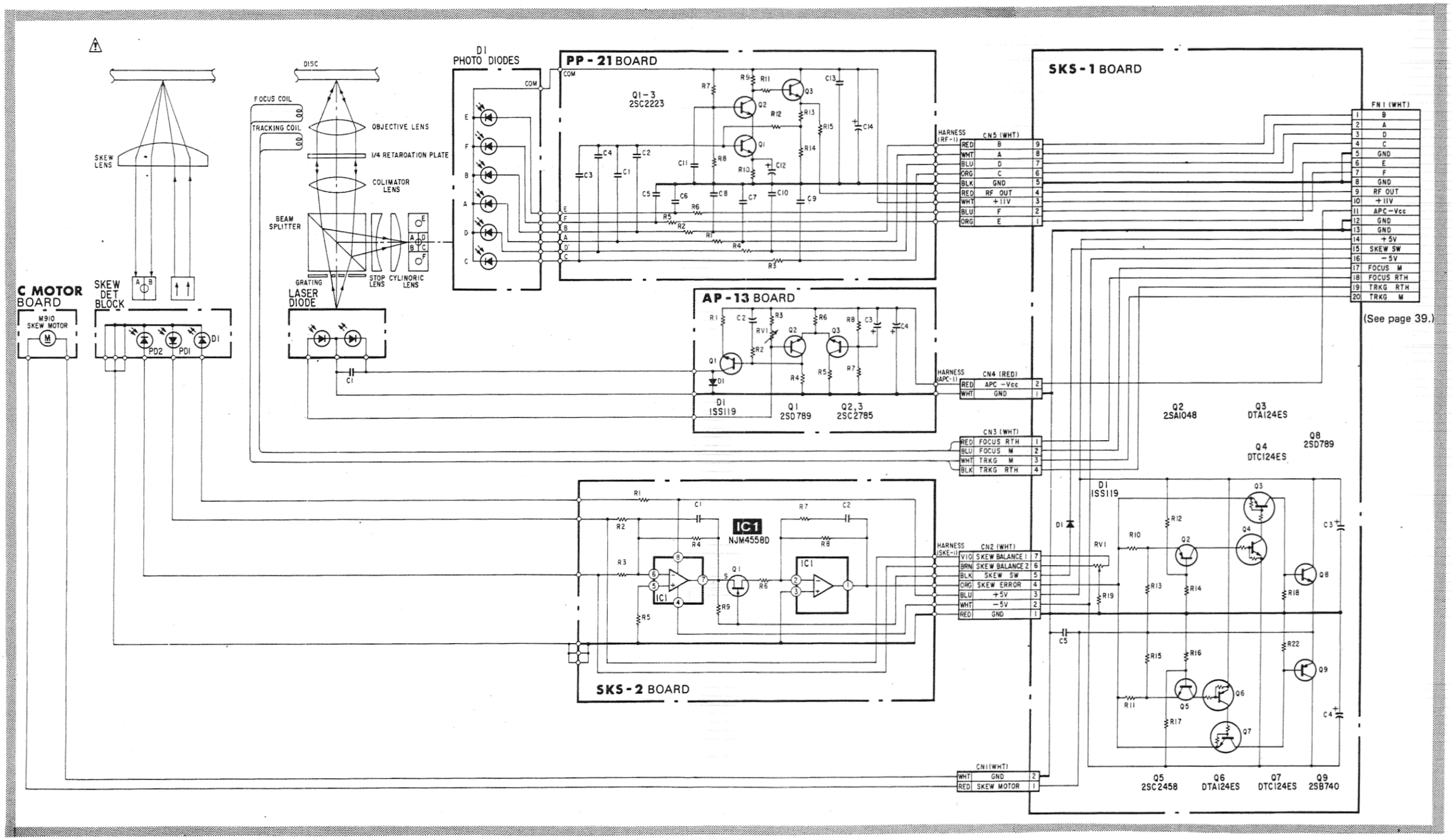

4-11. SEMICONDUCTORS

BA7021
TC5081AP

CXA1018S

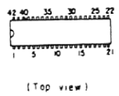

CXL1003P
CXL5003P
NJM2043D-D
NJM2903D
NJM4560D
μPC358C
μPC393C
μPC4558C

CXL1004P
TC9015P
μPD8243C

CX20061
CX20106A

HA12043

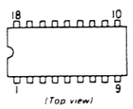

HA12083NT

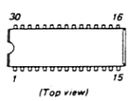

HD14538BP
PA0009
PA9003
SN74LS123N
SN74LS221N
TC4040BP
TC4053BP
TC74HC221P
TC74HC273P

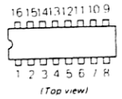

M51481P
PD0011

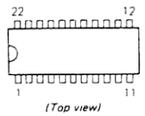

M54543L

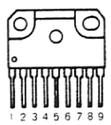

NJM78L05A
TA78L009AP

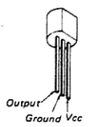

NJM79L05A

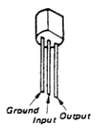

PM4001
UM3002A

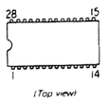

SN7510BN
SN75188N
SN75189AN
TC40H000P
TC40H004P
TC4011BP
TC4025BP
TC4066BP
TC4068BP
TC4069UBP
TC4081BP
TC504013BP

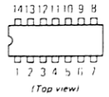

TA7060AP

TA78L009AP

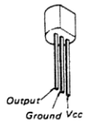

2SA1048-GR
2SC634SP
DTA114ES
DTA124ES
DTA144ES
DTC124ES
DTC124XS
DTC144ES

2SA1175
2SC2785

2SA1206
2SC2901

2SB1133-R
2SC2562
2SD1666-R

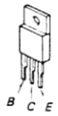

2SB740
2SC2878
2SC2878-B
2SD789

2SB1142S
2SD1682-S

2SD773-4
2SD774

2SK184
2SK184-GR

2SK523-L2

1SS119
RD10ESB1
RD2.4ESB
RD4.3ESB1
RD5.1ESB1
RD9.1ESB2

4D4B44

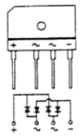

6D4B42-LC1

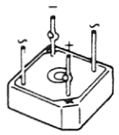

EE-SF5-B

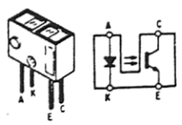

ERC24-06S

FC52M-5

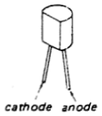

GL-5NG24

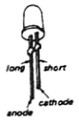

GP-1S04

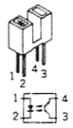

PH302B

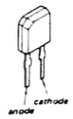

S5277D-LC7-10

TLY113A

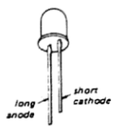

TLR113A

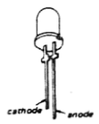

SECTION 5
EXPLODED VIEWS

NOTE:

- Itmes with no part number and no description are not stocked because they are seldom required for routine service.
- The construction parts of an assembled part are indicated with a collation number in the remark column.
- Items marked "*" are not stocked since they are seldom required for routine service. Some delay should be anticipated when ordering these items.
- The mechanical parts with no reference number in the exploded views are not supplied.

The components identified by mark ⚠ are critical for safety.
Replace only with part number specified.

Les composants identifiés par une marque ⚠ sont critiques pour la sécurité.
Ne les remplacer que par une pièce portant le numéro spécifié.

5-1. ORNAMENTAL PANEL

No.	Part No.	Description	Remark
1	X-3688-260-1	PANEL ASSY, FRONT	2
2	9-911-815-01	CUSHION	
3	*3-566-707-21	EMBLEM, SONY	
4	3-688-293-01	BUTTON, POWER	
5	3-694-988-12	KEY TOP (REV)	
6	X-3694-842-2	KEY TOP (PLAY) ASSY	
7	3-694-990-12	KEY TOP (FWD)	
8	X-3694-843-2	KEY TOP (PAUSE) ASSY	
9	3-694-995-01	BUTTON, AU	
10	3-669-596-00	WASHER (2.3), STOPPER	
11	3-694-986-02	COVER, WINDOW	
12	3-710-310-02	CASE, UPPER	
13	*X-3694-849-1	PLATE ASSY, BOTTOM	
14	A-6408-095-A	PANEL ASSY, FRONT	1-9

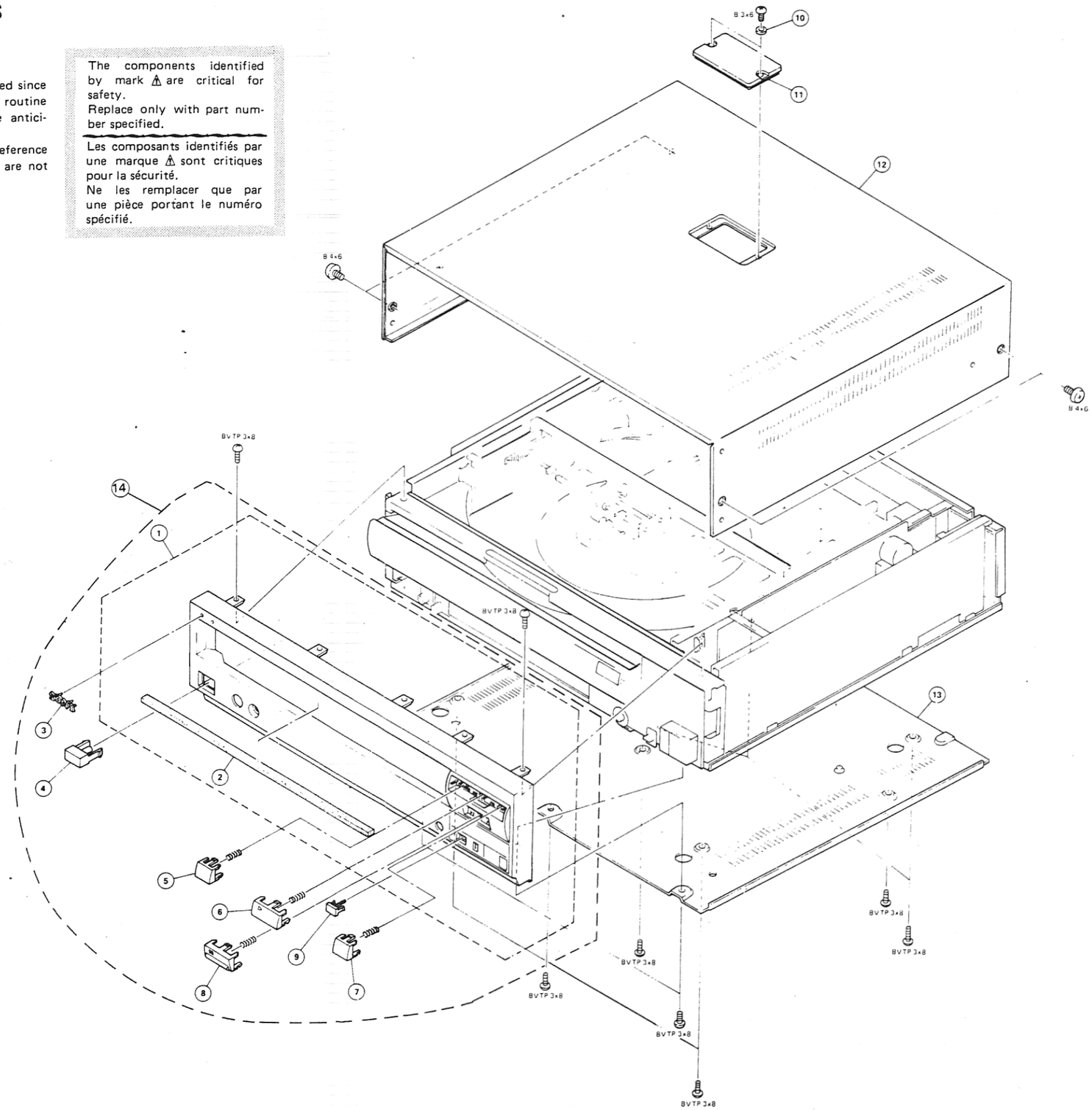

5-2. CHUCK ASS'Y

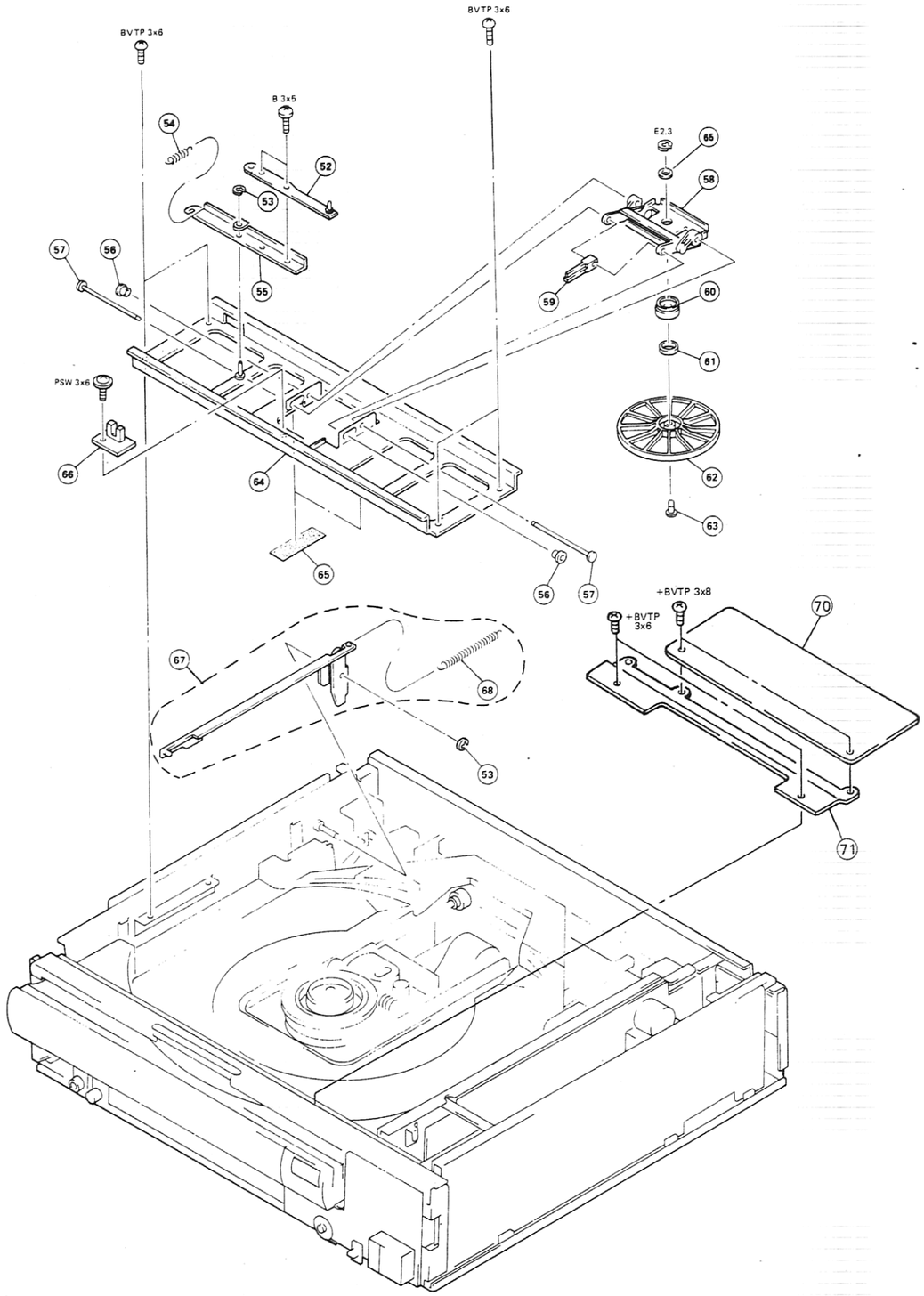

No.	Part No.	Description	Remark
52	*X-3688-210-3	PLATE ASSY, ADJUSTMENT	
53	3-669-596-00	WASHER (2.3), STOPPER	
54	3-639-381-XX	SPRING, TENSION	
55	*3-688-233-01	LINK (3)	
56	3-703-074-00	CAP 3, SHAFT	
57	*3-694-818-01	JOINT	
58	*X-3688-208-2	HOLDER ASSY, C	
59	3-694-817-02	JOINT	
60	*3-688-229-02	HOLDER, B	
61	3-694-820-01	BEARING (NO FLANGE), BALL	
62	3-688-232-01	CHUCK	
63	*3-694-816-01	PIN (S)	
64	*X-3694-810-3	BASE ASSY, CHUCK	
65	9-911-844-XX	CUSHION (C)	
66	*1-618-841-11	DUS-130 BOARD	
67	*X-3694-803-3	ARM ASSY, C	68
68	3-542-821-00	SPRING, TENSION	
69	3-701-439-21	WASHER	
70	*A-6421-196-A	SV-32 BOARD, COMPLETE	
71	*3-698-689-01	BRACKET, PC BOARD FITTING	

5-3. FRONT LOADING

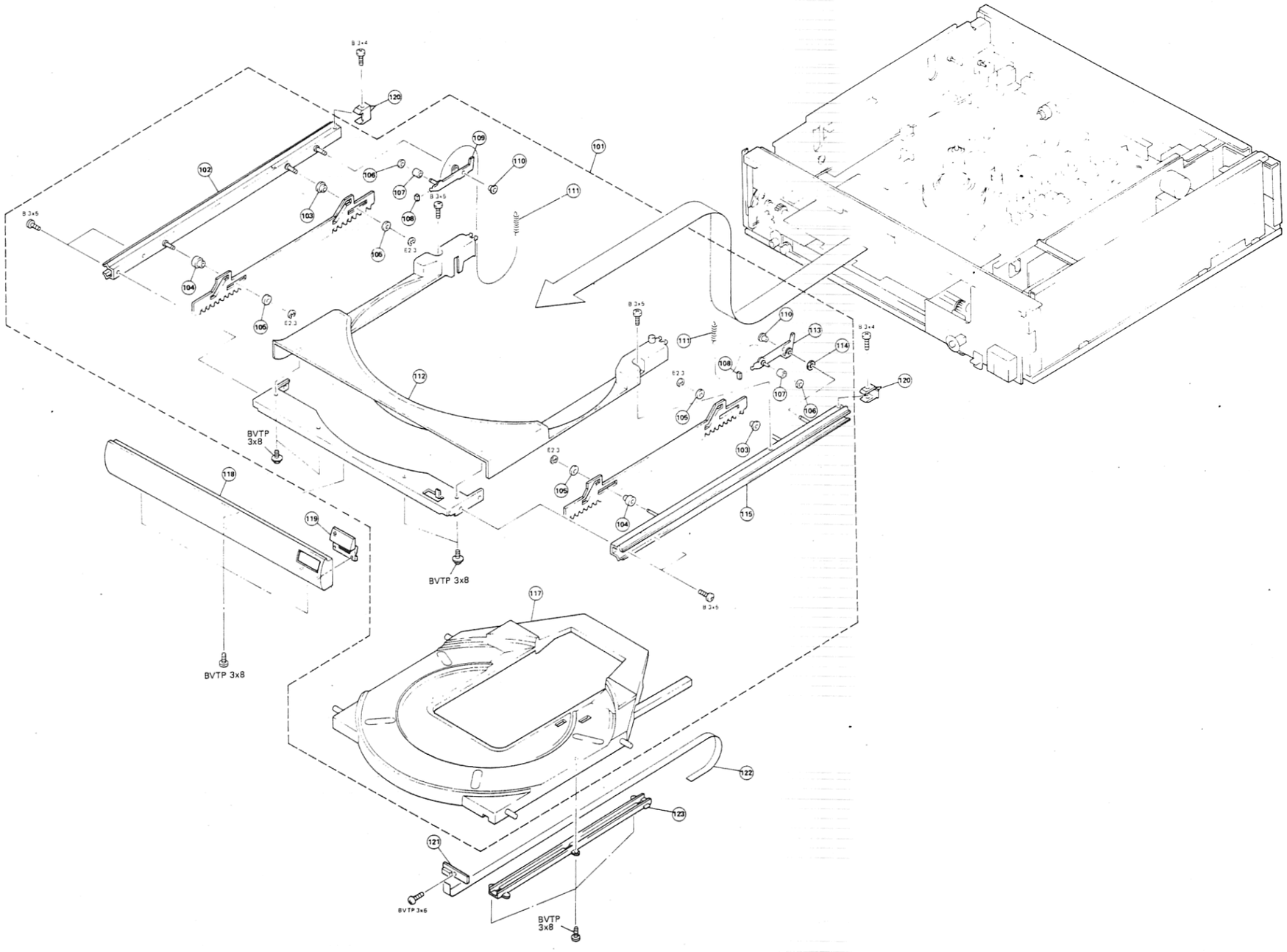

No.	Part No.	Description	Remark
101	*A-6415-114-B	F.L. ASSY	102-115, 117
102	*X-3694-817-1	RAIL (LEFT) ASSY, GUIDE	
103	3-694-841-01	ROLLER (R1)	
104	3-694-843-01	ROLLER (S)	
105	3-694-842-01	ROLLER (R2)	
106	3-669-596-00	WASHER (2.3), STOPPER	
107	3-688-207-01	ROLLER, STOPPER	
108	*3-676-143-00	STOPPER, ARM	
109	*X-3694-806-1	ARM (LEFT) ASSY, LOCK	
110	3-703-074-00	CAP 3, SHAFT	
111	3-535-558-00	SPRING, TENSION	
112	*3-694-849-21	COVER, UPPER	
113	*X-3694-807-1	ARM (RIGHT) ASSY, LOCK	
114	3-694-927-01	ROLLER (SW)	
115	*X-3694-818-1	RAIL (RIGHT) ASSY, GUIDE	
117	*X-3694-819-3	TRAY ASSY	
118	3-710-306-01	COVER, FRONT	
119	3-694-987-11	KEY TOP (OPEN/CLOSE)	
120	3-694-844-01	STOPPER	
121	*1-618-830-11	SW-127 BOARD	
122	1-558-057-11	WIRE, FLEXIBLE CARD 4P	
123	3-694-845-01	GUIDE, HARNESS	

5-4. CHASSIS (1)

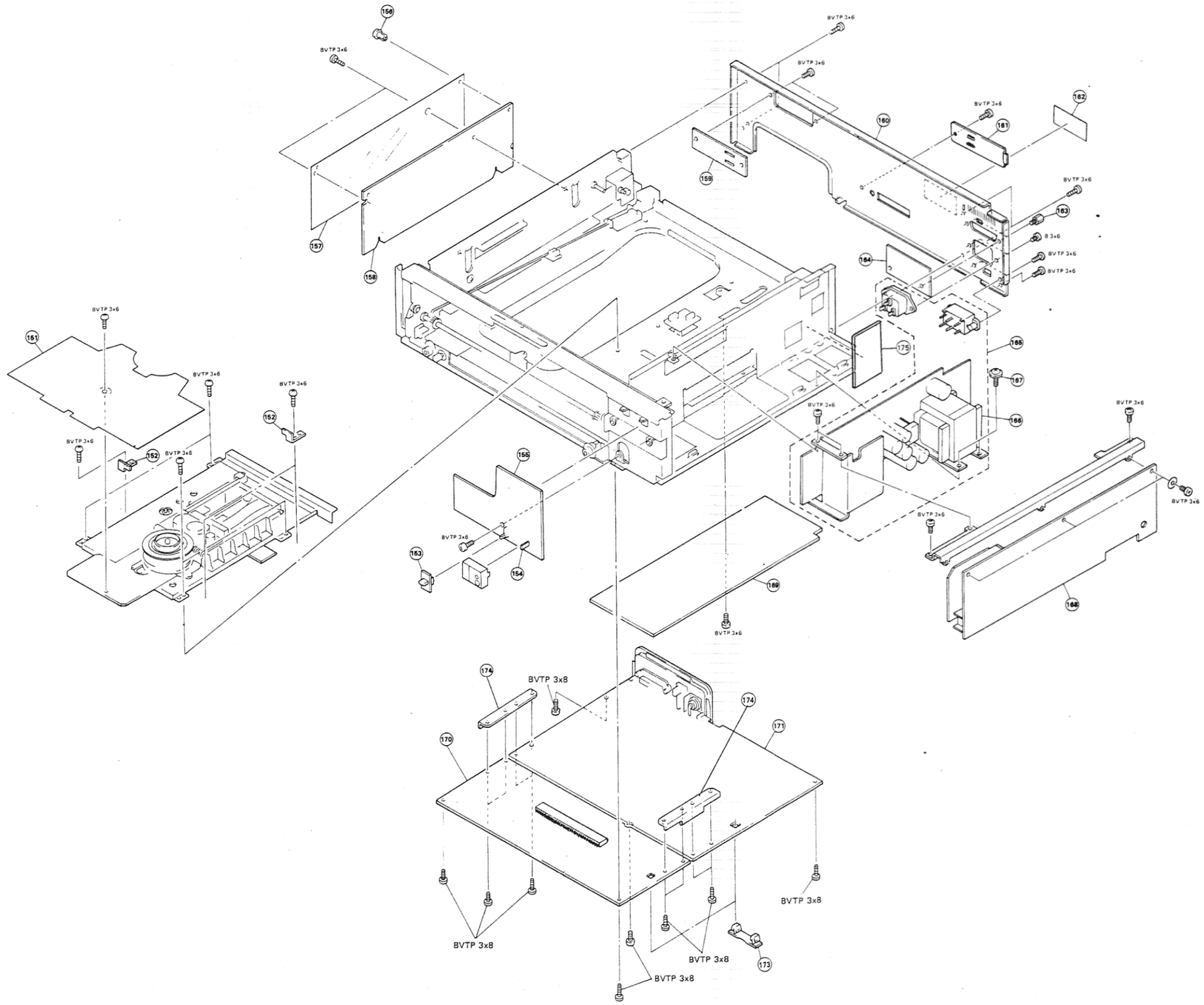

No.	Part No.	Description	Remark
151	*3-694-885-02	PLATE, BLIND	
152	*3-694-812-01	STOPPER, MECHANICAL BASE	
153	3-694-996-01	COVER, SW	
154	*1-618-837-11	PD-31 BOARD	
155	*1-618-836-11	KY-93 BOARD	
156	4-812-134-21	RIVET NYLON, 3.5	
157	*3-694-886-03	SHEET, INSULATING, AA	
158	*A-6421-079-A	AU-73 BOARD, COMPLETE	
159	*3-694-980-01	PLATE, BLIND	
160	*3-710-305-11	PANEL (P), REAR	
161	*3-694-979-01	LID, REAR PANEL	
162	*4-885-838-00	LABEL, CLASS 1	
163	*3-694-981-01	SCREW (INCH), D SUB	
164	*1-618-835-11	RS-21 BOARD	
165	*A-6421-083-A	PS-113 BOARD, COMPLETE	
166 ⚠	.1-448-443-11	TRANSFORMER, POWER (T2)	
167	4-886-821-11	SCREW, S TIGHT, +PTTWH 3X6	
168	*A-6421-198-A	SV-29 BOARD, COMPLETE	
169	*A-6421-078-A	PR-80 BOARD, COMPLETE	
170	*A-6421-197-A	SS-87 BOARD, COMPLETE	
171	*A-6421-203-A	VP-10 BOARD, COMPLETE	
173	*3-694-919-01	HINGE, CHASSIS	
174	*3-694-873-02	BRACKET, PC BOARD	
175	*3-710-337-21	PLATE (F), SHIELD	

The components identified by mark ⚠ are critical for safety.
Replace only with part number specified.

Les composants identifiés par une marque ⚠ sont critiques pour la sécurité.
Ne les remplacer que par une pièce portant le numéro spécifié.

5-5. CHASSIS (2)

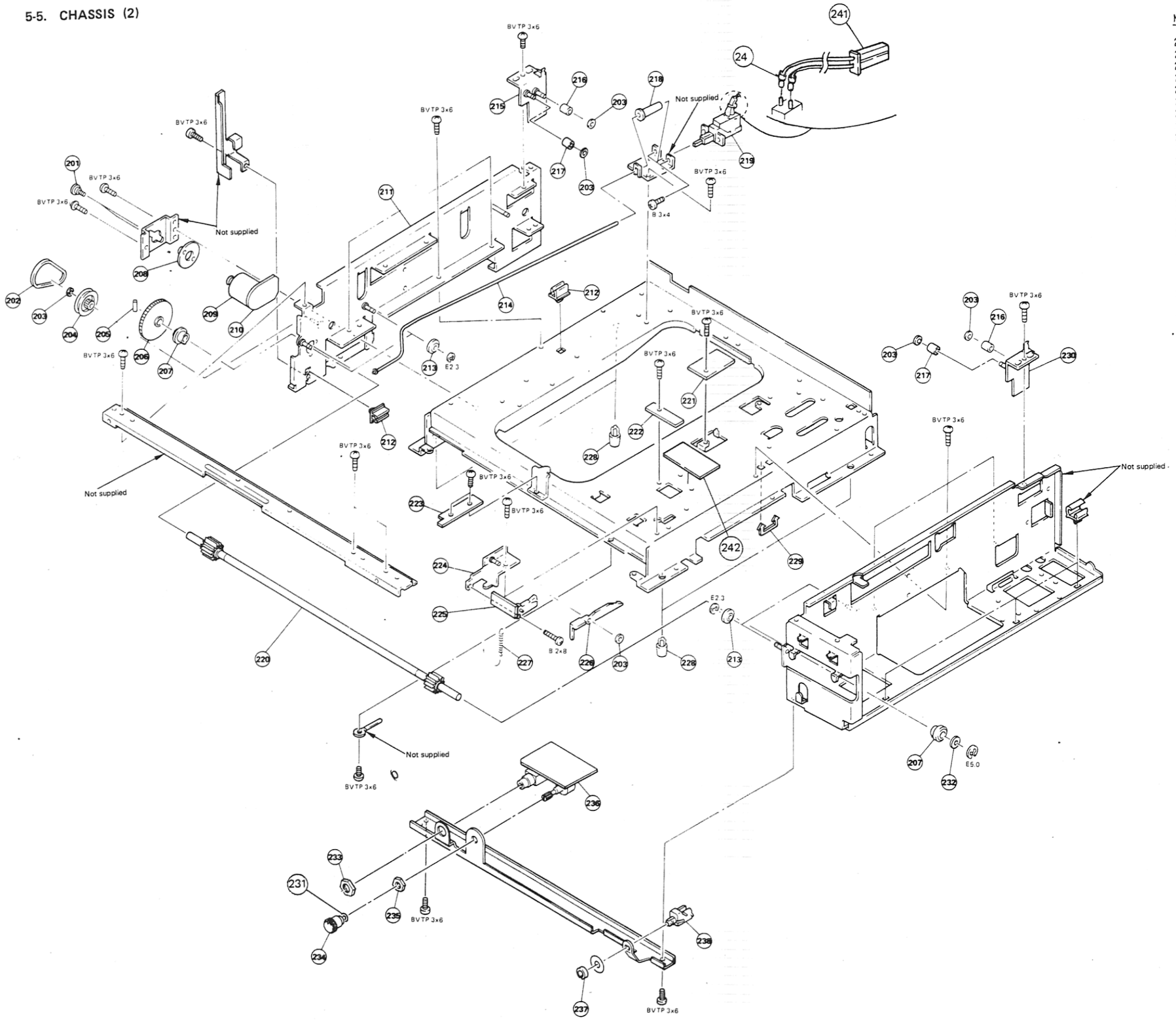

No.	Part No.	Description	Remark
201	3-694-825-01	SCREW (M3) (STEP), SPECIAL HEAD	
202	3-534-779-00	BELT, DRIVE	
203	3-669-596-00	WASHER (2.3), STOPPER	
204	3-694-829-02	PULLEY (G)	
205	3-703-358-03	PIN, PARALLEL (DIA. 2X8)	
206	3-694-832-01	GEAR (D)	
207	3-694-830-01	BEARING	
208	3-694-827-01	RUBBER, VIBRATION PROOF	
209	X-3694-872-1	MOTOR ASSY (LOADING) (M902)	
210	*1-618-838-11	DUS-127 BOARD	
211	*X-3694-815-4	PLATE ASSY, SIDE, LEFT	
212	*3-304-638-00	HOLDER, CHASSIS	
213	3-688-256-01	ROLLER (A), GUIDE	
214	*3-694-999-01	WIRE, SW	
215	*X-3694-845-1	STOPPER (LEFT) ASSY	
216	3-688-207-01	ROLLER, STOPPER	
217	*3-694-928-01	COLLAR, CUSHION	
218	*3-688-205-01	HOLDER, W	
219	⚠ 1-553-318-00	SWITCH, PUSH (AC POWER)(1 KEY) (S901)	
220	X-3694-855-1	SHAFT ASSY, DRIVE	
221	*1-618-840-11	DUS-129 BOARD	
222	*1-618-839-11	DUS-128 BOARD	
223	*3-710-313-01	PLATE, FRONT	
224	*X-3694-805-2	BRACKET ASSY, S	
225	*1-618-844-11	SW-138 BOARD	
226	3-694-824-01	PLATE, S	
227	3-630-566-00	SPRING (LOADING)	
228	3-694-479-01	FOOT	
229	*3-667-211-00	RETAINER, WIRE, FLUX	
230	*X-3694-850-1	STOPPER (RIGHT) ASSY	
231	*3-322-413-11	SPACER, INSULATING	
232	3-701-444-21	WASHER, 6	
233	3-684-465-01	NUT, HEXAGON	
234	4-902-067-41	KNOB, CONTROL	
235	3-703-078-01	NUT	
236	*1-618-843-11	HP-25 BOARD	
237	*3-667-512-00	SPACER, REMOTE JACK	
238	1-507-195-21	SPECIAL REMOTE CONTROL JACK (J901)	
240	⚠ 1-509-898-00	RECEPTACLE	
241	⚠ 1-509-910-00	HOUSING, CONNECTOR (2P)	
242	*3-710-337-21	PLATE (F), SHIELD	

The components identified by mark ⚠ are critical for safety.
Replace only with part number specified.

Les composants identifiés par une marque ⚠ sont critiques pour la sécurité.
Ne les remplacer que par une pièce portant le numéro spécifié.

5-6. MECHANICAL BASE

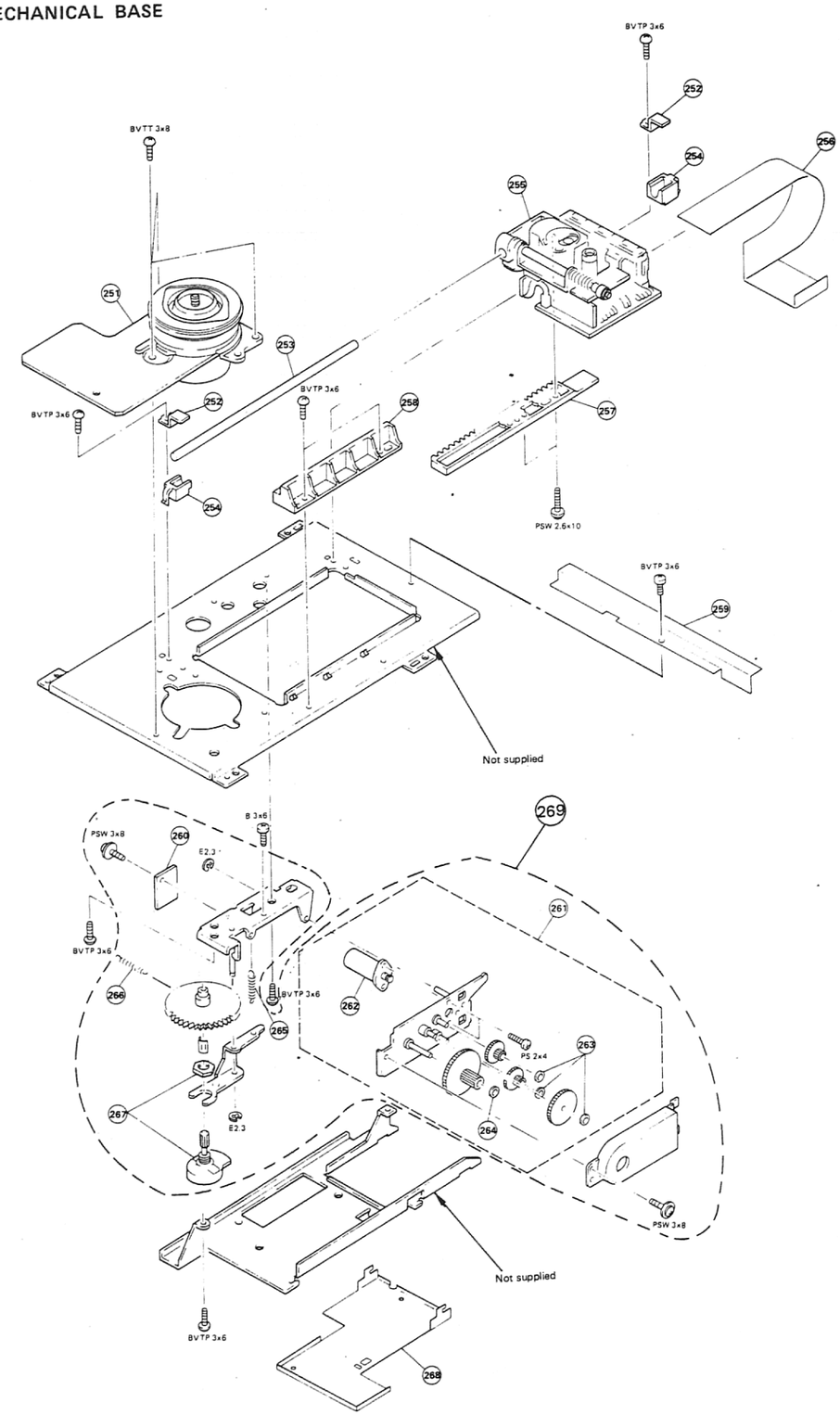

No.	Part No.	Description	Remark
251	8-835-171-01	MOTOR, DC BHF-3401A (SPINDLE) (M903)	
252	*3-694-811-01	RETAINER, SHAFT, FEED	
253	*3-688-322-02	SHAFT, GUIDE	
254	*3-694-810-01	HOLDER, FEED SHAFT	
255	8-848-053-01	PICKUP, OPTICS KSS-141B	
256	1-558-058-11	WIRE, FLEXIBLE CARD 20P	
257	3-694-911-01	RACK	
258	*3-694-910-02	TABLE, ROLLER	
259	*3-710-304-01	GUARD, HARNESS	
260	*1-626-679-11	SM-3 BOARD	
261	A-6491-025-A	GEAR BLOCK ASSY, FEED	262-264
262	1-541-503-11	MOTOR, DC (MNR-8400A) (SLIDER) (M901)	
263	3-669-465-00	WASHER (1.5), STOPPER	
264	3-669-596-00	WASHER (2.3), STOPPER	
265	*3-657-248-00	SPRING, TENSION	
266	3-507-111-00	SPRING, TENSION	
267	1-228-139-21	RES, VAR, CARBON 10K	
268	*3-694-879-02	SHIELD (B), FLEXIBLE	
269	A-6491-032-A	MOTOR ASSY, SLIDE	260-267

• HARDWARE LIST

SCREW

7-621-772-40	SCREW +B 2X8	
7-628-253-00	SCREW +PS 2X4	
7-628-254-30	+PSW, 2.6X10	
7-682-545-09	SCREW +B 3X4	
7-682-546-09	SCREW +B 3X5	
7-682-547-04	SCREW +B 3X6	
7-682-547-09	SCREW +B 3X6	
7-682-548-04	SCREW +BVTT 3X8 (S)	
7-682-560-04	SCREW +B 4X6	
7-682-647-09	SCREW +PSW 3X6	
7-682-648-09	SCREW +PSW 3X8	
7-682-904-01	SCREW +PWH 4X6	
7-685-645-79	SCREW +BVTP 3X6	TYPE2 IT-3
7-685-645-79	SCREW +BVTP 3X6	TYPE2
7-685-646-79	SCREW +BVTP 3X8	TYPE2 IT-3
7-685-646-79	SCREW +BVTP 3X8	TYPE2
7-685-647-79	SCREW +BVTP 3X10	TYPE2 IT-3
7-685-647-79	SCREW +BVTP 3X10	TYPE2

STOP RING

7-624-105-04	STOP RING 2.3, TYPE -E
7-624-109-04	STOP RING 5.0, TYPE -E

SPRING PIN

7-626-301-31	SPRING PIN 2X10

SECTION 6
ELECTRICAL PARTS LIST

PR-80

NOTE:

The components identified by mark ⚠ are critical for safety.
Replace only with part number specified.

Les composants identifiés par une marque ⚠ sont critiques pour la sécurité.
Ne les remplacer que par une pièce portant le numéro spécifié.

When indicating parts by reference number, please include the board name.

- Due to standardization, replacements in the parts list may be different from the parts specified in the diagrams or the components used on the set.
- RESISTORS
  All resistors are in ohms
  METAL: Metal-film resistor
  METAL OXIDE: Metal Oxide-film resistor
  F: nonflammable
- Items marked "*" are not stocked since they are seldom required for routine service. Some delay should be anticipated when ordering these items.
- -XX, -X mean standardized parts, so they may have some differences from the original one.
- SEMICONDUCTORS
  In each case, U: μ, for example:
  UA. . . : μA. . . , UPA. . . : μPA. . . ,
  UPB. . . : μPB. . . , UPC. . . : μPC. . . ,
  UPD. . . : μPD. . .
- CAPACITORS
  MF: μF, PF: μμF
- COILS
  MMH: mH, UH: μH

Ref.No	Part No.	Description				Remark
	*A-6421-078-A	PR-80 BOARD, COMPLETE				
		**********				
		CAPACITOR				
C1	1-124-270-11	ELECT	0.47MF	20%	50V	
C2	1-123-379-00	ELECT	0.47MF	20%	50V	
C3	1-161-379-00	CERAMIC	0.01MF	30%	16V	
C4	1-161-379-00	CERAMIC	0.01MF	30%	16V	
C5	1-161-379-00	CERAMIC	0.01MF	30%	16V	
C6	1-124-283-00	ELECT	4.7MF	20%	16V	
C7	1-162-282-31	CERAMIC	100PF	10%	50V	
C8	1-124-270-11	ELECT	0.47MF	20%	50V	
C9	1-162-217-31	CERAMIC	56PF	5%	50V	
C10	1-162-217-31	CERAMIC	56PF	5%	50V	
C11	1-130-480-00	MYLAR	0.0056MF	5%	50V	
C13	1-123-332-00	ELECT	47MF	20%	16V	
C16	1-161-379-00	CERAMIC	0.01MF	30%	16V	
C17	1-161-379-00	CERAMIC	0.01MF	30%	16V	
C20	1-161-379-00	CERAMIC	0.01MF	30%	16V	
C21	1-161-379-00	CERAMIC	0.01MF	30%	16V	
C22	1-130-477-00	MYLAR	0.0033MF	5%	50V	
C23	1-130-476-00	MYLAR	0.0027MF	5%	50V	
C012	1-162-215-31	CERAMIC	47PF	5%	50V	
C014	1-124-462-00	ELECT	10MF	20%	16V	
C015	1-123-356-00	ELECT	10MF	20%	16V	
C018	1-124-462-00	ELECT	10MF	20%	16V	
C019	1-124-462-00	ELECT	10MF	20%	16V	
C101	1-123-380-00	ELECT	1MF	20%	50V	
C102	1-161-379-00	CERAMIC	0.01MF	30%	16V	
C103	1-102-976-00	CERAMIC	180PF	5%	50V	
C104	1-123-356-00	ELECT	10MF	20%	16V	
C105	1-162-284-31	CERAMIC	150PF	10%	50V	
C106	1-162-288-31	CERAMIC	330PF	10%	50V	
C107	1-162-284-31	CERAMIC	150PF	10%	50V	
C108	1-123-356-00	ELECT	10MF	20%	16V	
C109	1-123-380-00	ELECT	1MF	20%	50V	
C110	1-130-491-00	MYLAR	0.047MF	5%	50V	
C111	1-162-198-31	CERAMIC	8.2PF	10%	50V	
C112	1-162-198-31	CERAMIC	8.2PF	10%	50V	
C113	1-162-290-31	CERAMIC	470PF	10%	50V	
C114	1-162-290-31	CERAMIC	470PF	10%	50V	
C116	1-162-282-31	CERAMIC	100PF	10%	50V	
C117	1-101-005-00	CERAMIC	0.022MF		50V	
C118	1-162-284-31	CERAMIC	150PF	10%	50V	
C119	1-162-215-31	CERAMIC	47PF	5%	50V	
C120	1-130-476-00	MYLAR	0.0027MF	5%	50V	
C121	1-123-356-00	ELECT	10MF	20%	16V	
C122	1-161-379-00	CERAMIC	0.01MF	30%	16V	
C123	1-161-379-00	CERAMIC	0.01MF	30%	16V	
C124	1-161-379-00	CERAMIC	0.01MF	30%	16V	
C125	1-162-215-31	CERAMIC	47PF	5%	50V	
C126	1-123-332-00	ELECT	47MF	20%	16V	
C127	1-123-332-00	ELECT	47MF	20%	16V	
C128	1-123-333-00	ELECT	100MF	20%	16V	
C129	1-162-201-31	CERAMIC	12PF	5%	50V	
C130	1-162-211-31	CERAMIC	33PF	5%	50V	
C131	1-162-205-31	CERAMIC	18PF	5%	50V	
C132	1-162-192-31	CERAMIC	2.7PF	10%	50V	
C133	1-102-976-00	CERAMIC	180PF	5%	50V	
C134	1-123-333-00	ELECT	100MF	20%	16V	
C135	1-162-217-31	CERAMIC	56PF	5%	50V	
C136	1-123-356-00	ELECT	10MF	20%	16V	
		CONNECTOR				
CN2	*1-560-893-00	PIN, CONNECTOR 5P				
CN3	*1-560-893-00	PIN, CONNECTOR 5P				
CN6	*1-560-890-00	PIN, CONNECTOR 2P				
CN7	*1-560-891-00	PIN, CONNECTOR 3P				
CN8	*1-564-035-11	PIN, CONNECTOR 10P				
		DIODE				
D1	8-719-911-19	DIODE 1SS119				
D2	8-719-911-19	DIODE 1SS119				
D3	8-719-109-84	DIODE RD5.1ES-B1				
D101	8-719-110-16	DIODE RD10ESB1				
		CONNECTOR SOCKET				
FN1	*1-562-883-11	SOCKET, CONNECTOR 20P				
		IC				
IC1	8-759-729-03	IC NJM2903D				
IC2	8-759-145-58	IC UPC4558C				
IC3	8-759-145-58	IC UPC4558C				
IC4	8-759-145-58	IC UPC4558C				
IC5	8-759-145-58	IC UPC4558C				
IC6	8-759-145-58	IC UPC4558C				
IC7	8-759-145-58	IC UPC4558C				
IC101	8-759-600-99	IC M51481P				
		COIL				
L101	1-408-420-00	INDUCTOR	82UH			
L102	1-408-420-00	INDUCTOR	82UH			
L103	1-408-411-00	INDUCTOR	15UH			
L104	1-408-422-00	INDUCTOR	120UH			
L105	1-408-417-00	INDUCTOR	47UH			
L106	1-408-421-00	INDUCTOR	100UH			
L107	1-408-421-00	INDUCTOR	100UH			
L108	1-408-419-00	INDUCTOR	68UH			
L109	1-408-419-00	INDUCTOR	68UH			
L110	1-408-414-00	INDUCTOR	27UH			
L111	1-408-409-00	INDUCTOR	10UH			
L112	1-408-421-00	INDUCTOR	100UH			
		IC LINK				
PS001⚠	1-532-727-11	LINK, IC				

PR-80

Ref.No	Part No.	Description				Remark
		TRANSISTOR				
Q1	8-729-178-54	TRANSISTOR 2SC2785				
Q2	8-729-204-84	TRANSISTOR 2SA1048-GR				
Q3	8-729-204-84	TRANSISTOR 2SA1048-GR				
Q4	8-729-804-86	TRANSISTOR 2SB1142-S				
Q5	8-729-204-84	TRANSISTOR 2SA1048-GR				
Q6	8-729-178-54	TRANSISTOR 2SC2785				
Q7	8-729-900-63	TRANSISTOR DTA124ES				
Q8	8-729-178-54	TRANSISTOR 2SC2785				
Q101	8-729-218-42	TRANSISTOR 2SK184				
Q102	8-729-178-54	TRANSISTOR 2SC2785				
Q103	8-729-178-54	TRANSISTOR 2SC2785				
Q104	8-729-178-54	TRANSISTOR 2SC2785				
Q105	8-729-178-54	TRANSISTOR 2SC2785				
Q106	8-729-178-54	TRANSISTOR 2SC2785				
Q107	8-729-178-54	TRANSISTOR 2SC2785				
Q108	8-729-178-54	TRANSISTOR 2SC2785				
Q109	8-729-204-83	TRANSISTOR 2SA1048-GR				
		RESISTOR				
R1	1-249-411-11	CARBON	330	5%	1/4W	
R2	1-249-425-11	CARBON	4.7K	5%	1/4W	
R3	1-249-408-11	CARBON	180	5%	1/4W	
R4	1-249-425-11	CARBON	4.7K	5%	1/4W	
R5	1-249-416-11	CARBON	820	5%	1/4W	
R6	1-249-418-11	CARBON	1.2K	5%	1/4W	
R7	1-249-427-11	CARBON	6.8K	5%	1/4W	
R8	1-249-432-11	CARBON	18K	5%	1/4W	
R9	1-249-429-11	CARBON	10K	5%	1/4W	
R10	1-249-435-11	CARBON	33K	5%	1/4W	
R11	1-249-435-11	CARBON	33K	5%	1/4W	
R12	1-249-425-11	CARBON	4.7K	5%	1/4W	
R13	1-210-828-00	CARBON	4.7M	5%	1/4W	
R14	1-249-429-11	CARBON	10K	5%	1/4W	
R15	1-249-429-11	CARBON	10K	5%	1/4W	
R16	1-249-418-11	CARBON	1.2K	5%	1/4W	
R17	1-249-413-11	CARBON	470	5%	1/4W	
R18	1-249-429-11	CARBON	10K	5%	1/4W	
R19	1-210-828-00	CARBON	4.7M	5%	1/4W	
R20	1-249-429-11	CARBON	10K	5%	1/4W	
R21	1-249-425-11	CARBON	4.7K	5%	1/4W	
R22	1-249-425-11	CARBON	4.7K	5%	1/4W	
R23	1-249-425-11	CARBON	4.7K	5%	1/4W	
R24	1-249-425-11	CARBON	4.7K	5%	1/4W	
R25	1-249-433-11	CARBON	22K	5%	1/4W	
R26	1-249-433-11	CARBON	22K	5%	1/4W	
R27	1-249-429-11	CARBON	10K	5%	1/4W	
R28	1-249-429-11	CARBON	10K	5%	1/4W	
R29	1-247-885-00	CARBON	180K	5%	1/4W	
R30	1-249-429-11	CARBON	10K	5%	1/4W	
R31	1-249-429-11	CARBON	10K	5%	1/4W	
R32	1-249-434-11	CARBON	27K	5%	1/4W	
R33	1-249-435-11	CARBON	33K	5%	1/4W	
R34	1-249-434-11	CARBON	27K	5%	1/4W	
R35	1-249-405-11	CARBON	100	5%	1/4W	
R36	1-249-428-11	CARBON	8.2K	5%	1/4W	
R37	1-249-428-11	CARBON	8.2K	5%	1/4W	
R38	1-249-437-11	CARBON	47K	5%	1/4W	
R39	1-249-429-11	CARBON	10K	5%	1/4W	
R40	1-249-434-11	CARBON	27K	5%	1/4W	
R41	1-249-437-11	CARBON	47K	5%	1/4W	
R42	1-249-429-11	CARBON	10K	5%	1/4W	
R43	1-249-429-11	CARBON	10K	5%	1/4W	
R44	1-249-434-11	CARBON	27K	5%	1/4W	
R45	1-249-429-11	CARBON	10K	5%	1/4W	
R46	1-249-437-11	CARBON	47K	5%	1/4W	
R47	1-249-435-11	CARBON	33K	5%	1/4W	
R48	1-249-437-11	CARBON	47K	5%	1/4W	
R49	1-249-437-11	CARBON	47K	5%	1/4W	
R50	1-249-405-11	CARBON	100	5%	1/4W	
R51	1-249-429-11	CARBON	10K	5%	1/4W	
R52	1-249-428-11	CARBON	8.2K	5%	1/4W	
R53	1-249-423-11	CARBON	3.3K	5%	1/4W	
R54	1-249-434-11	CARBON	27K	5%	1/4W	
R55	1-249-414-11	CARBON	560	5%	1/4W	
R56	1-249-418-11	CARBON	1.2K	5%	1/4W	
R57	1-249-423-11	CARBON	3.3K	5%	1/4W	
R58	1-249-431-11	CARBON	15K	5%	1/4W	
R59	1-249-441-11	CARBON	100K	5%	1/4W	
R60	1-249-423-11	CARBON	3.3K	5%	1/4W	
R61	1-249-441-11	CARBON	100K	5%	1/4W	
R62	1-249-437-11	CARBON	47K	5%	1/4W	
R63	1-249-429-11	CARBON	10K	5%	1/4W	
R64	1-249-418-11	CARBON	1.2K	5%	1/4W	
R65	1-249-430-11	CARBON	12K	5%	1/4W	
R66	1-249-433-11	CARBON	22K	5%	1/4W	
R67	1-249-429-11	CARBON	10K	5%	1/4W	
R68	1-249-429-11	CARBON	10K	5%	1/4W	
R72	1-249-437-11	CARBON	47K	5%	1/4W	
R73	1-249-430-11	CARBON	12K	5%	1/4W	
R74	1-215-489-00	CARBON	680K	5%	1/4W	
R75	1-215-479-00	CARBON	270K	5%	1/4W	
R76	1-249-437-11	CARBON	47K	5%	1/4W	
R102	1-249-425-11	CARBON	4.7K	5%	1/4W	
R103	1-249-429-11	CARBON	10K	5%	1/4W	
R104	1-249-421-11	CARBON	2.2K	5%	1/4W	
R105	1-249-416-11	CARBON	820	5%	1/4W	
R106	1-249-409-11	CARBON	220	5%	1/4W	
R107	1-249-413-11	CARBON	470	5%	1/4W	
R108	1-249-415-11	CARBON	680	5%	1/4W	
R109	1-249-417-11	CARBON	1K	5%	1/4W	
R110	1-249-413-11	CARBON	470	5%	1/4W	
R111	1-215-394-00	CARBON	75	5%	1/4W	
R112	1-249-417-11	CARBON	1K	5%	1/4W	
R113	1-249-426-11	CARBON	5.6K	5%	1/4W	

When indicating parts by reference number, please include the board name.

Ref.No	Part No.	Description				Remark
R114	1-249-418-11	CARBON	1.2K	5%	1/4W	
R115	1-249-417-11	CARBON	1K	5%	1/4W	
R116	1-249-414-11	CARBON	560	5%	1/4W	
R117	1-249-405-11	CARBON	100	5%	1/4W	
R118	1-249-417-11	CARBON	1K	5%	1/4W	
R119	1-249-401-11	CARBON	47	5%	1/4W	
R120	1-249-417-11	CARBON	1K	5%	1/4W	
R121	1-249-433-11	CARBON	22K	5%	1/4W	
R122	1-249-418-11	CARBON	1.2K	5%	1/4W	
R123	1-249-417-11	CARBON	1K	5%	1/4W	
R124	1-249-417-11	CARBON	1K	5%	1/4W	
R125	1-249-419-11	CARBON	1.5K	5%	1/4W	
R126	1-249-421-11	CARBON	2.2K	5%	1/4W	
R127	1-249-417-11	CARBON	1K	5%	1/4W	
R128	1-249-419-11	CARBON	1.5K	5%	1/4W	
R129	1-249-414-11	CARBON	560	5%	1/4W	
R130	1-249-436-11	CARBON	39K	5%	1/4W	
R131	1-249-432-11	CARBON	18K	5%	1/4W	
R132	1-249-417-11	CARBON	1K	5%	1/4W	
R133	1-249-416-11	CARBON	820	5%	1/4W	
R134	1-249-418-11	CARBON	1.2K	5%	1/4W	
R135	1-249-421-11	CARBON	2.2K	5%	1/4W	

VARIABLE RESISTOR

RV1	1-228-994-00	RES, ADJ, CARBON 10K
RV2	1-228-995-00	RES, ADJ, CARBON 22K
RV3	1-228-994-00	RES, ADJ, CARBON 10K
RV4	1-228-996-00	RES, ADJ, CARBON 47K
RV5	1-228-990-00	RES, ADJ, CARBON 1K
RV6	1-228-996-00	RES, ADJ, CARBON 47K

VARIABLE RESISTOR

RV007	1-228-993-00	RES, ADJ, CARBON 4.7K
RV101	1-228-990-00	RES, ADJ, CARBON 1K
RV102	1-228-993-00	RES, ADJ, CARBON 4.7K

****

*A-6421-079-A AU-73 BOARD, COMPLETE
****

BAND PASS FILTER

BPF1	1-235-805-11	FILTER, BAND PASS
BPF2	1-235-806-11	FILTER, BAND PASS

CAPACITOR

Ref.No	Part No.	Description				Remark
C1	1-130-475-00	MYLAR	0.0022MF	5%	50V	
C2	1-123-306-00	ELECT	47MF	20%	10V	
C3	1-162-294-31	CERAMIC	0.001MF	10%	50V	
C4	1-123-306-00	ELECT	47MF	20%	10V	
C5	1-161-379-00	CERAMIC	0.01MF	30%	16V	
C6	1-124-292-00	ELECT	33MF	20%	6.3V	
C7	1-123-356-00	ELECT	10MF	20%	16V	
C8	1-161-021-11	CERAMIC	0.047MF	10%	25V	
C9	1-161-494-00	CERAMIC	0.022MF		25V	
C10	1-123-356-00	ELECT	10MF	20%	16V	
C11	1-162-290-31	CERAMIC	470PF	10%	50V	
C12	1-123-369-00	ELECT	4.7MF	20%	50V	
C13	1-130-495-00	MYLAR	0.1MF	5%	50V	
C14	1-123-306-00	ELECT	47MF	20%	10V	
C15	1-161-494-00	CERAMIC	0.022MF		25V	
C16	1-161-494-00	CERAMIC	0.022MF		25V	
C17	1-161-494-00	CERAMIC	0.022MF		25V	
C18	1-124-124-00	ELECT	220MF	20%	10V	
C19	1-161-494-00	CERAMIC	0.022MF		25V	
C20	1-161-494-00	CERAMIC	0.022MF		25V	
C21	1-161-494-00	CERAMIC	0.022MF		25V	
C22	1-162-290-31	CERAMIC	470PF	10%	50V	
C23	1-124-124-00	ELECT	220MF	20%	10V	
C24	1-162-207-31	CERAMIC	22PF	5%	50V	
C25	1-162-282-31	CERAMIC	100PF	10%	50V	
C26	1-161-379-00	CERAMIC	0.01MF	30%	16V	
C27	1-130-478-00	MYLAR	0.0039MF	5%	50V	
C29	1-130-478-00	MYLAR	0.0039MF	5%	50V	
C30	1-123-330-00	ELECT	22MF	20%	16V	
C31	1-130-473-00	MYLAR	0.0015MF	5%	50V	
C33	1-162-287-31	CERAMIC	270PF	10%	50V	
C37	1-162-286-31	CERAMIC	220PF	10%	50V	
C38	1-123-330-00	ELECT	22MF	20%	16V	
C39	1-130-489-00	MYLAR	0.033MF	5%	50V	
C40	1-161-377-00	CERAMIC	0.0047MF	30%	16V	
C41	1-123-356-00	ELECT	10MF	20%	16V	
C42	1-123-356-00	ELECT	10MF	20%	16V	
C43	1-124-124-00	ELECT	220MF	20%	10V	
C44	1-161-494-00	CERAMIC	0.022MF		25V	
C45	1-161-494-00	CERAMIC	0.022MF		25V	
C46	1-161-494-00	CERAMIC	0.022MF		25V	
C47	1-124-124-00	ELECT	220MF	20%	10V	
C48	1-162-293-31	CERAMIC	820PF	10%	50V	
C49	1-161-379-00	CERAMIC	0.01MF	30%	16V	
C50	1-162-288-31	CERAMIC	330PF	10%	50V	
C51	1-130-478-00	MYLAR	0.0039MF	5%	50V	
C52	1-162-211-31	CERAMIC	33PF	5%	50V	
C53	1-123-330-00	ELECT	22MF	20%	16V	
C55	1-130-478-00	MYLAR	0.0039MF	5%	50V	
C56	1-123-369-00	ELECT	4.7MF	20%	50V	
C57	1-123-330-00	ELECT	22MF	20%	16V	
C58	1-161-377-00	CERAMIC	0.0047MF	30%	16V	
C59	1-123-330-00	ELECT	22MF	20%	16V	
C60	1-162-286-31	CERAMIC	220PF	10%	50V	
C61	1-130-489-00	MYLAR	0.033MF	5%	50V	
C62	1-162-287-31	CERAMIC	270PF	10%	50V	
C66	1-130-473-00	MYLAR	0.0015MF	5%	50V	
C69	1-123-306-00	ELECT	47MF	20%	10V	
C70	1-130-493-00	MYLAR	0.068MF	5%	50V	
C71	1-130-493-00	MYLAR	0.068MF	5%	50V	

When indicating parts by reference number, please include the board name.

AU-73

Ref.No	Part No.	Description				Remark
C72	1-130-495-00	MYLAR	0.1MF	5%	50V	
C73	1-123-330-00	ELECT	22MF	20%	16V	
C74	1-123-379-00	ELECT	0.47MF	20%	50V	
C75	1-123-369-00	ELECT	4.7MF	20%	50V	
C76	1-123-369-00	ELECT	4.7MF	20%	50V	
C77	1-123-369-00	ELECT	4.7MF	20%	50V	
C78	1-123-369-00	ELECT	4.7MF	20%	50V	
C79	1-124-963-11	ELECT	33MF	20%	16V	
C80	1-162-282-31	CERAMIC	100PF	10%	50V	
C81	1-124-963-11	ELECT	33MF	20%	16V	
C82	1-162-282-31	CERAMIC	100PF	10%	50V	
C83	1-124-963-11	ELECT	33MF	20%	16V	
C84	1-124-963-11	ELECT	33MF	20%	16V	
C85	1-123-356-00	ELECT	10MF	20%	16V	
C86	1-123-356-00	ELECT	10MF	20%	16V	
C87	1-123-356-00	ELECT	10MF	20%	16V	
C88	1-123-356-00	ELECT	10MF	20%	16V	
C90	1-161-494-00	CERAMIC	0.022MF		25V	
C91	1-162-283-31	CERAMIC	120PF	10%	50V	
C92	1-161-494-00	CERAMIC	0.022MF		25V	
C94	1-123-356-00	ELECT	10MF	20%	50V	
C95	1-123-332-00	ELECT	47MF	20%	25V	

CONNECTOR

CN1	*1-560-890-00	PIN, CONNECTOR 2P
CN2	*1-560-894-00	PIN, CONNECTOR 6P
CN3	*1-560-893-00	PIN, CONNECTOR 5P
CN4	*1-560-894-00	PIN, CONNECTOR 6P
CN5	*1-560-893-00	PIN, CONNECTOR 5P

DIODE

D1	8-719-911-19	DIODE 1SS119
D2	8-719-911-19	DIODE 1SS119
D7	8-719-911-19	DIODE 1SS119
D8	8-719-801-73	DIODE S5277D-LC7-10
D9	8-719-911-19	DIODE 1SS119

IC

IC1	8-752-320-30	IC CXL1003P
IC2	8-759-103-93	IC UPC393C
IC3	8-759-303-75	IC HA12083NT
IC6	8-759-745-60	IC NJM4560D
IC7	8-759-708-05	IC NJM78L05A
IC8	8-759-700-65	IC NJM79L05A
IC005	8-759-302-81	IC HA12043

COIL

L1	1-408-425-00	INDUCTOR	220UH
L2	1-407-503-00	INDUCTOR	8.2MMH
L7	1-408-424-00	INDUCTOR	180UH
L8	1-407-503-00	INDUCTOR	8.2MMH
L13	1-410-067-11	INDUCTOR	4.7MMH
L14	1-410-067-11	INDUCTOR	4.7MMH

TRANSISTOR

Ref.No	Part No.	Description	Remark
Q1	8-729-178-54	TRANSISTOR 2SC2785	
Q2	8-729-117-54	TRANSISTOR 2SA1175	
Q3	8-729-178-54	TRANSISTOR 2SC2785	
Q5	8-729-218-43	TRANSISTOR 2SK184-GR	
Q6	8-729-178-54	TRANSISTOR 2SC2785	
Q7	8-729-178-54	TRANSISTOR 2SC2785	
Q8	8-729-204-82	TRANSISTOR 2SA1048-Y	
Q9	8-729-600-27	TRANSISTOR 2SC634SP	
Q10	8-729-201-05	TRANSISTOR 2SC2878-B	
Q11	8-729-201-05	TRANSISTOR 2SC2878-B	
Q13	8-729-201-05	TRANSISTOR 2SC2878-B	
Q16	8-729-204-83	TRANSISTOR 2SA1048-Y	

RESISTOR

R1	1-249-441-11	CARBON	100K	5%	1/4W
R2	1-249-433-11	CARBON	22K	5%	1/4W
R3	1-249-417-11	CARBON	1K	5%	1/4W
R4	1-249-437-11	CARBON	47K	5%	1/4W
R5	1-249-417-11	CARBON	1K	5%	1/4W
R6	1-249-437-11	CARBON	47K	5%	1/4W
R10	1-249-429-11	CARBON	10K	5%	1/4W
R11	1-249-425-11	CARBON	4.7K	5%	1/4W
R12	1-249-429-11	CARBON	10K	5%	1/4W
R13	1-249-437-11	CARBON	47K	5%	1/4W
R14	1-249-441-11	CARBON	100K	5%	1/4W
R15	1-249-429-11	CARBON	10K	5%	1/4W
R16	1-249-409-11	CARBON	220	5%	1/4W
R17	1-249-417-11	CARBON	1K	5%	1/4W
R18	1-249-425-11	CARBON	4.7K	5%	1/4W
R19	1-249-441-11	CARBON	100K	5%	1/4W
R20	1-249-417-11	CARBON	1K	5%	1/4W
R21	1-249-420-11	CARBON	1.8K	5%	1/4W
R22	1-249-408-11	CARBON	180	5%	1/4W
R23	1-249-425-11	CARBON	4.7K	5%	1/4W
R24	1-249-413-11	CARBON	470	5%	1/4W
R25	1-249-416-11	CARBON	820	5%	1/4W
R29	1-249-417-11	CARBON	1K	5%	1/4W
R30	1-249-422-11	CARBON	2.7K	5%	1/4W
R31	1-249-425-11	CARBON	4.7K	5%	1/4W
R32	1-249-417-11	CARBON	1K	5%	1/4W
R35	1-249-417-11	CARBON	1K	5%	1/4W
R36	1-210-821-00	CARBON	2.2M	5%	1/4W
R37	1-249-419-11	CARBON	1.5K	5%	1/4W
R38	1-249-417-11	CARBON	1K	5%	1/4W
R39	1-249-413-11	CARBON	470	5%	1/4W
R40	1-249-425-11	CARBON	4.7K	5%	1/4W
R41	1-249-441-11	CARBON	100K	5%	1/4W
R42	1-249-421-11	CARBON	2.2K	5%	1/4W
R43	1-249-429-11	CARBON	10K	5%	1/4W
R44	1-249-429-11	CARBON	10K	5%	1/4W
R45	1-249-429-11	CARBON	10K	5%	1/4W

When indicating parts by reference number, please include the board name.

Ref.No	Part No.	Description				Remark
R46	1-249-439-11	CARBON	68K	5%	1/4W	
R47	1-249-425-11	CARBON	4.7K	5%	1/4W	
R48	1-249-424-11	CARBON	3.9K	5%	1/4W	
R49	1-249-416-11	CARBON	820	5%	1/4W	
R51	1-249-417-11	CARBON	1K	5%	1/4W	
R54	1-249-421-11	CARBON	2.2K	5%	1/4W	
R55	1-249-416-11	CARBON	820	5%	1/4W	
R57	1-249-417-11	CARBON	1K	5%	1/4W	
R58	1-210-821-00	CARBON	2.2M	5%	1/4W	
R59	1-249-425-11	CARBON	4.7K	5%	1/4W	
R60	1-249-441-11	CARBON	100K	5%	1/4W	
R61	1-249-419-11	CARBON	1.5K	5%	1/4W	
R62	1-249-421-11	CARBON	2.2K	5%	1/4W	
R63	1-215-395-00	METAL	82	1%	1/6W	
R64	1-215-437-00	METAL	4.7K	1%	1/6W	
R65	1-249-439-11	CARBON	68K	5%	1/4W	
R66	1-249-424-11	CARBON	3.9K	5%	1/4W	
R67	1-249-425-11	CARBON	4.7K	5%	1/4W	
R68	1-249-417-11	CARBON	1K	5%	1/4W	
R69	1-249-413-11	CARBON	470	5%	1/4W	
R71	1-249-425-11	CARBON	4.7K	5%	1/4W	
R72	1-249-425-11	CARBON	4.7K	5%	1/4W	
R73	1-247-883-00	CARBON	150K	5%	1/4W	
R74	1-247-883-00	CARBON	150K	5%	1/4W	
R75	1-215-468-00	METAL	91K	1%	1/6W	
R76	1-210-828-00	CARBON	4.7M	5%	1/4W	
R77	1-215-468-00	METAL	91K	1%	1/6W	
R78	1-249-421-11	CARBON	2.2K	5%	1/4W	
R79	1-249-409-11	CARBON	220	5%	1/4W	
R80	1-249-427-11	CARBON	6.8K	5%	1/4W	
R81	1-249-427-11	CARBON	6.8K	5%	1/4W	
R83	1-249-409-11	CARBON	220	5%	1/4W	
R84	1-249-434-11	CARBON	27K	5%	1/4W	
R85	1-215-462-00	METAL	51K	1%	1/6W	
R86	1-249-432-11	CARBON	18K	5%	1/4W	
R87	1-249-434-11	CARBON	27K	5%	1/4W	
R88	1-249-432-11	CARBON	18K	5%	1/4W	
R89	1-215-462-00	METAL	51K	1%	1/6W	
R90	1-249-437-11	CARBON	47K	5%	1/4W	
R91	1-249-437-11	CARBON	47K	5%	1/4W	
R92	1-249-441-11	CARBON	100K	5%	1/4W	
R95	1-249-420-11	CARBON	1.8K	5%	1/4W	

VARIABLE RESISTOR

RV1	1-228-996-00	RES, ADJ, CARBON 47K
RV2	1-228-993-00	RES, ADJ, CARBON 4.7K
RV3	1-228-995-00	RES, ADJ, CARBON 22K
RV4	1-228-995-00	RES, ADJ, CARBON 22K

****

Ref.No	Part No.	Description	Remark
	*A-6421-083-A	PS-113 BOARD, COMPLETE	
		**********	
⚠	1-509-546-00	3P INLET	
	1-533-162-00	HOLDER, FUSE	
	1-535-512-11	TERMINAL, DIP	
⚠	1-570-173-11	SWITCH, VOLTAGE CHANGE (220V/240V)	
	3-645-566-00	BAND, BINDING	

CAPACITOR

C2	1-101-006-00	CERAMIC	0.047MF		50V
C3	1-101-006-00	CERAMIC	0.047MF		50V
C4	1-124-772-11	ELECT	10000MF	20%	25V
C6	1-124-771-00	ELECT	6800MF	20%	25V
C8	1-124-763-00	ELECT	10000MF	20%	10V
C9	1-123-356-00	ELECT	10MF	20%	50V
C11	1-124-120-11	ELECT	220MF	20%	16V
C14	1-124-120-11	ELECT	220MF	20%	16V
C18	1-123-380-00	ELECT	1MF	20%	50V
C001	⚠ 1-136-472-11	FILM	0.1MF	20%	250V
C005	1-124-564-11	ELECT	4700MF	20%	25V
C007	1-126-091-11	ELECT	15000MF	20%	10V
C016	1-124-444-00	ELECT	220MF	20%	10V
C017	1-124-444-00	ELECT	220MF	20%	10V
C020	1-124-444-00	ELECT	220MF	20%	10V

CONNECTOR

CN2	*1-560-894-00	PIN, CONNECTOR 6P
CN3	*1-560-893-00	PIN, CONNECTOR 5P
CN4	*1-560-894-00	PIN, CONNECTOR 6P
CN5	*1-560-894-00	PIN, CONNECTOR 6P
CN6	*1-560-900-00	PIN, CONNECTOR 12P
CN7	*1-560-891-00	PIN, CONNECTOR 3P
CN10	⚠ 1-506-371-00	2P PLUG (L)

DIODE

D1	8-719-801-73	DIODE S5277D-LC7-10
D2	8-719-801-73	DIODE S5277D-LC7-10
D3	8-719-801-72	DIODE 6D4B42-LC1
D4	8-719-801-74	DIODE 4D4B44
D6	8-719-911-19	DIODE 1SS119
D7	8-719-911-19	DIODE 1SS119
D11	8-719-109-55	DIODE RD2.4ESB
D13	8-719-911-19	DIODE 1SS119

FUSE

F001	⚠ 1-532-284-00	FUSE, TIME-LAG
F002	⚠ 1-532-237-00	FUSE, TIME-LAG
F003	⚠ 1-532-237-00	FUSE, TIME-LAG
F004	⚠ 1-532-259-00	FUSE, TIME-LAG
F005	⚠ 1-532-259-00	FUSE, TIME-LAG

IC

IC1	8-759-135-80	IC UPC358C

The components identified by mark ⚠ are critical for safety.
Replace only with part number specified.

Les composants identifiés par une marque ⚠ sont critiques pour la sécurité.
Ne les remplacer que par une pièce portant le numéro spécifié.

When indicating parts by reference number, please include the board name.

PS-113 SV-32

Ref.No	Part No.	Description	Remark
IC2	8-759-135-80	IC UPC358C	

IC LINK

PS001⚠	1-532-605-00	LINK, IC	
PS003⚠	1-532-605-00	LINK, IC	

TRANSISTOR

Q1	8-729-804-67	TRANSISTOR 2SB1133-R	
Q3	8-729-804-17	TRANSISTOR 2SD1666-R	
Q4	8-729-804-67	TRANSISTOR 2SB1133-R	
Q5	8-729-804-17	TRANSISTOR 2SD1666-R	
Q6	8-729-105-73	TRANSISTOR 2SK523-L2	
Q7	8-729-177-33	TRANSISTOR 2SD773-4	

RESISTOR

R1	1-249-421-11	CARBON	2.2K	5%	1/4W	
R2	1-249-413-11	CARBON	470	5%	1/4W	
R4	1-215-447-00	METAL	12K	1%	1/6W	
R5	1-215-445-00	METAL	10K	1%	1/6W	
R9	1-215-461-00	METAL	47K	1%	1/6W	
R10	1-215-461-00	METAL	47K	1%	1/6W	
R12	1-249-415-11	CARBON	680	5%	1/4W	
R14	1-249-431-11	CARBON	15K	5%	1/4W	
R15	1-249-430-11	CARBON	12K	5%	1/4W	
R16	1-249-428-11	CARBON	8.2K	5%	1/4W	
R17	1-249-411-11	CARBON	330	5%	1/4W	
R19	1-215-445-00	METAL	10K	1%	1/6W	
R20	1-215-445-00	METAL	10K	1%	1/6W	
R21	1-249-408-11	CARBON	180	5%	1/4W	
R25	1-249-416-11	CARBON	820	5%	1/4W	
R26	1-249-417-11	CARBON	1K	5%	1/4W	
R27	1-202-663-51	SOLID	5.6M	20%	1/2W	
R013	1-249-430-11	CARBON	12K	5%	1/4W	
R024	1-249-429-11	CARBON	10K	5%	1/4W	
R029	1-249-429-11	CARBON	10K	5%	1/4W	
R030	1-249-429-11	CARBON	10K	5%	1/4W	
R205	1-249-402-11	CARBON	56	5%	1/4W	
R205	1-249-403-11	CARBON	68	5%	1/4W	
R205	1-249-404-00	CARBON	82	5%	1/4W	
R205	1-249-405-11	CARBON	100	5%	1/4W	

VARIABLE RESISTOR

RV1	1-228-990-00	RES, ADJ, CARBON 1K

TRANSFORMER

T001 ⚠	1-421-771-11	FILTER, LINE

****

Ref.No	Part No.	Description	Remark
	*A-6421-196-A	SV-32 BOARD, COMPLETE **********	

CAPACITOR

C001	1-162-286-31	CERAMIC	220PF	10%	50V
C002	1-130-471-00	MYLAR	0.001MF	5%	50V
C004	1-130-471-00	MYLAR	0.001MF	5%	50V
C005	1-130-474-00	MYLAR	0.0018MF	5%	50V
C006	1-130-475-00	MYLAR	0.0022MF	5%	50V
C007	1-130-482-00	MYLAR	0.0082MF	5%	50V
C008	1-124-245-00	ELECT	4.7MF	20%	16V
C009	1-127-474-51	ELECT(SOLID)	0.15MF	5%	25V
C011	1-130-483-00	MYLAR	0.01MF	5%	50V
C012	1-136-166-00	MYLAR	0.12MF	5%	50V
C013	1-130-474-00	MYLAR	0.0018MF	5%	50V
C101	1-161-379-00	CERAMIC	0.01MF	30%	16V
C102	1-161-379-00	CERAMIC	0.01MF	30%	16V
C103	1-161-379-00	CERAMIC	0.01MF	30%	16V
C104	1-161-379-00	CERAMIC	0.01MF	30%	16V
C105	1-161-379-00	CERAMIC	0.01MF	30%	16V
C106	1-161-379-00	CERAMIC	0.01MF	30%	16V
C107	1-161-379-00	CERAMIC	0.01MF	30%	16V
C108	1-161-379-00	CERAMIC	0.01MF	30%	16V
C109	1-161-379-00	CERAMIC	0.01MF	30%	16V
C110	1-161-379-00	CERAMIC	0.01MF	30%	16V
C111	1-161-379-00	CERAMIC	0.01MF	30%	16V
C112	1-124-584-00	ELECT	100MF	20%	10V
C113	1-161-379-00	CERAMIC	0.01MF	30%	16V
C114	1-124-584-00	ELECT	100MF	20%	10V
C115	1-161-379-00	CERAMIC	0.01MF	30%	16V

CONNECTOR

CN001	*1-564-035-11	PIN, CONNECTOR 10P
CN002	*1-564-028-00	PIN, CONNECTOR 3P

DIODE

D001	8-719-911-19	DIODE 1SS119
D002	8-719-911-19	DIODE 1SS119
D003	8-719-911-19	DIODE 1SS119

IC

IC001	8-759-729-03	IC NJM2903D
IC002	8-759-972-44	IC MSM70H034RS
IC003	8-759-203-08	IC TC74HC221P
IC004	8-759-145-58	IC UPC4558C
IC005	8-759-345-38	IC HD14538EP
IC006	8-759-145-58	IC UPC4558C
IC007	8-759-240-66	IC TC4066BP

TRANSISTOR

Q001	8-729-117-54	TRANSISTOR 2SA1175

The components identified by mark ⚠ are critical for safety.
Replace only with part number specified.

Les composants identifiés par une marque ⚠ sont critiques pour la sécurité.
Ne les remplacer que par une pièce portant le numéro spécifié.

When indicating parts by reference number, please include the board name.

Ref.No	Part No.	Description	Remark
Q002	8-729-600-27	TRANSISTOR 2SC634SP	
Q003	8-729-117-54	TRANSISTOR 2SA1175	
Q004	8-729-900-89	TRANSISTOR DTC144ES	
Q005	8-729-900-89	TRANSISTOR DTC144ES	
Q006	8-729-900-65	TRANSISTOR DTA144ES	
Q007	8-729-900-89	TRANSISTOR DTC144ES	
Q008	8-729-900-65	TRANSISTOR DTA144ES	
Q009	8-729-900-65	TRANSISTOR DTA144ES	
Q010	8-729-117-54	TRANSISTOR 2SA1175	

RESISTOR

Ref.No	Part No.	Description				Remark
R001	1-249-429-11	CARBON	10K	5%	1/4W	
R002	1-249-425-11	CARBON	4.7K	5%	1/4W	
R003	1-249-430-11	CARBON	12K	5%	1/4W	
R004	1-215-493-00	CARBON	1M	5%	1/4W	
R005	1-249-425-11	CARBON	4.7K	5%	1/4W	
R007	1-249-430-11	CARBON	12K	5%	1/4W	
R008	1-249-424-11	CARBON	3.9K	5%	1/4W	
R009	1-249-425-11	CARBON	4.7K	5%	1/4W	
R010	1-249-413-11	CARBON	470	5%	1/4W	
R011	1-249-434-11	CARBON	27K	5%	1/4W	
R012	1-249-437-11	CARBON	47K	5%	1/4W	
R013	1-249-427-11	CARBON	6.8K	5%	1/4W	
R014	1-215-487-00	CARBON	560K	5%	1/4W	
R015	1-249-433-11	CARBON	22K	5%	1/4W	
R016	1-249-430-11	CARBON	12K	5%	1/4W	
R017	1-249-437-11	CARBON	47K	5%	1/4W	
R018	1-249-437-11	CARBON	47K	5%	1/4W	
R019	1-249-437-11	CARBON	47K	5%	1/4W	
R020	1-249-437-11	CARBON	47K	5%	1/4W	
R021	1-249-405-11	CARBON	100	5%	1/4W	
R022	1-249-429-11	CARBON	10K	5%	1/4W	
R023	1-249-441-11	CARBON	100K	5%	1/4W	
R024	1-247-887-00	CARBON	220K	5%	1/4W	
R025	1-249-425-11	CARBON	4.7K	5%	1/4W	
R026	1-249-441-11	CARBON	100K	5%	1/4W	
R027	1-249-429-11	CARBON	10K	5%	1/4W	
R028	1-249-429-11	CARBON	10K	5%	1/4W	
R029	1-249-439-11	CARBON	68K	5%	1/4W	
R030	1-247-887-00	CARBON	220K	5%	1/4W	
R031	1-249-437-11	CARBON	47K	5%	1/4W	
R032	1-249-437-11	CARBON	47K	5%	1/4W	
R033	1-249-437-11	CARBON	47K	5%	1/4W	
R034	1-249-437-11	CARBON	47K	5%	1/4W	
R035	1-249-437-11	CARBON	47K	5%	1/4W	
R036	1-249-437-11	CARBON	47K	5%	1/4W	
R037	1-249-440-11	CARBON	82K	5%	1/4W	

VARIABLE RESISTOR

Ref.No	Part No.	Description	Remark
RV001	1-228-997-00	RES, ADJ, CARBON 100K	
RV003	1-228-994-00	RES, ADJ, CARBON 10K	
RV004	1-228-997-00	RES, ADJ, CARBON 100K	

Ref.No	Part No.	Description				Remark
	*A-6421-197-A	SS-87 BOARD, COMPLETE **********				

CAPACITOR

Ref.No	Part No.	Description				Remark
C002	1-124-257-00	ELECT	2.2MF	20%	50V	
C003	1-162-215-31	CERAMIC	47PF	5%	50V	
C004	1-162-215-31	CERAMIC	47PF	5%	50V	
C005	1-123-333-00	ELECT	100MF	20%	16V	
C006	1-161-021-11	CERAMIC	0.047MF	10%	25V	
C007	1-161-379-00	CERAMIC	0.01MF	30%	16V	
C009	1-162-199-31	CERAMIC	10PF	5%	50V	
C010	1-161-379-00	CERAMIC	0.01MF	30%	16V	
C011	1-162-215-31	CERAMIC	47PF	5%	50V	
C012	1-162-199-31	CERAMIC	10PF	5%	50V	
C013	1-161-379-00	CERAMIC	0.01MF	30%	16V	
C014	1-161-379-00	CERAMIC	0.01MF	30%	16V	
C015	1-161-379-00	CERAMIC	0.01MF	30%	16V	
C016	1-161-379-00	CERAMIC	0.01MF	30%	16V	
C017	1-161-379-00	CERAMIC	0.01MF	30%	16V	
C018	1-161-379-00	CERAMIC	0.01MF	30%	16V	
C019	1-161-379-00	CERAMIC	0.01MF	30%	16V	
C020	1-161-379-00	CERAMIC	0.01MF	30%	16V	
C021	1-161-379-00	CERAMIC	0.01MF	30%	16V	
C022	1-161-379-00	CERAMIC	0.01MF	30%	16V	
C023	1-161-379-00	CERAMIC	0.01MF	30%	16V	
C024	1-161-379-00	CERAMIC	0.01MF	30%	16V	
C025	1-161-379-00	CERAMIC	0.01MF	30%	16V	
C026	1-161-379-00	CERAMIC	0.01MF	30%	16V	
C027	1-161-379-00	CERAMIC	0.01MF	30%	16V	
C201	1-161-379-00	CERAMIC	0.01MF	30%	16V	
C202	1-123-369-00	ELECT	4.7MF	20%	25V	
C203	1-130-477-00	MYLAR	0.0033MF	5%	50V	
C204	1-123-369-00	ELECT	4.7MF	20%	25V	
C205	1-162-282-31	CERAMIC	100PF	10%	50V	
C209	1-161-379-00	CERAMIC	0.01MF	30%	16V	
C212	1-161-379-00	CERAMIC	0.01MF	30%	16V	
C217	1-130-471-00	MYLAR	0.001MF	5%	50V	
C218	1-124-010-00	ELECT	100MF	20%	25V	
C219	1-162-282-31	CERAMIC	100PF	10%	50V	
C220	1-124-290-00	ELECT	47MF	20%	6.3V	
C221	1-124-477-11	ELECT	47MF	20%	16V	
C222	1-124-477-11	ELECT	47MF	20%	16V	
C223	1-130-483-00	MYLAR	0.01MF	5%	50V	
C224	1-123-369-00	ELECT	4.7MF	20%	25V	
C225	1-123-380-00	ELECT	1MF	20%	50V	
C226	1-123-356-00	ELECT	10MF	20%	16V	
C227	1-123-356-00	ELECT	10MF	20%	16V	
C229	1-130-471-00	MYLAR	0.001MF	5%	50V	
C231	1-162-290-31	CERAMIC	470PF	10%	50V	
C233	1-162-294-31	CERAMIC	0.001MF	10%	50V	
C240	1-130-471-00	MYLAR	0.001MF	5%	50V	
C241	1-124-124-00	ELECT	220MF	20%	6.3V	
C301	1-162-286-31	CERAMIC	220PF	10%	50V	

When indicating parts by reference number, please include the board name.

SS-87

Ref.No	Part No.	Description				Remark
C302	1-130-471-00	MYLAR	0.001MF	5%	50V	
C303	1-123-369-00	ELECT	4.7MF	20%	25V	
C304	1-162-286-31	CERAMIC	220PF	10%	50V	
C305	1-130-483-00	MYLAR	0.01MF	5%	50V	
C306	1-161-379-00	CERAMIC	0.01MF	30%	16V	
C307	1-123-379-00	ELECT	0.47MF	20%	50V	
		CONNECTOR				
CN10	*1-560-900-41	PIN, CONNECTOR 12P				
CN001	*1-560-894-00	PIN, CONNECTOR 6P				
CN002	*1-560-900-00	PIN, CONNECTOR 12P				
CN003	*1-560-898-00	PIN, CONNECTOR 10P				
CN004	*1-560-894-00	PIN, CONNECTOR 6P				
CN005	*1-560-890-00	PIN, CONNECTOR 2P				
CN006	*1-560-894-00	PIN, CONNECTOR 6P				
CN007	*1-560-890-00	PIN, CONNECTOR 2P				
CN009	*1-560-892-00	PIN, CONNECTOR 4P				
CN012	*1-560-898-00	PIN, CONNECTOR 10P				
		TRIMAR				
CV001	1-141-260-00	TRIMAR, CERAMIC				
		DIODE				
D001	8-719-109-74	DIODE RD4.3ES-B1				
D201	8-719-911-19	DIODE 1SS119				
D202	8-719-911-19	DIODE 1SS119				
D204	8-719-911-19	DIODE 1SS119				
D205	8-719-911-19	DIODE 1SS119				
D206	8-719-911-19	DIODE 1SS119				
D208	8-719-911-19	DIODE 1SS119				
D209	8-719-911-19	DIODE 1SS119				
D210	8-719-911-19	DIODE 1SS119				
D211	8-719-911-19	DIODE 1SS119				
D301	8-719-911-19	DIODE 1SS119				
D302	8-719-911-19	DIODE 1SS119				
D303	8-719-911-19	DIODE 1SS119				
D304	8-719-911-19	DIODE 1SS119				
		IC				
IC002	8-759-912-72	IC PD0011				
IC003	8-759-912-69	IC PD0010				
IC004	8-759-600-24	IC M54543L				
IC005	8-759-203-21	IC TC74HC273P				
IC201	8-759-912-59	IC UM3002A				
IC203	8-759-250-81	IC TC5081AP				
IC204	8-759-345-38	IC HD14538BP				
IC205	8-759-145-58	IC UPC4558C				
IC206	8-759-240-24	IC TC4024BP				
IC207	8-759-901-23	IC SN74LS123N				
IC301	8-759-240-81	IC TC4081BP				
IC302	8-759-729-03	IC NJM2903D				

Ref.No	Part No.	Description				Remark
		IC SOCKET				
ICS001	1-526-830-11	SOCKET, IC 64P				
		COIL				
L001	1-408-425-00	INDUCTOR	220UH			
L002	1-408-425-00	INDUCTOR	220UH			
		TRANSISTOR				
Q001	8-729-600-27	TRANSISTOR 2SC634SP				
Q002	8-729-600-27	TRANSISTOR 2SC634SP				
Q203	8-729-218-42	TRANSISTOR 2SK184				
Q211	8-729-600-27	TRANSISTOR 2SC634SP				
Q212	8-729-204-83	TRANSISTOR 2SA1048-GR				
Q213	8-729-218-42	TRANSISTOR 2SK184				
Q214	8-729-600-27	TRANSISTOR 2SC634SP				
Q215	8-729-900-83	TRANSISTOR DTC124XS				
Q303	8-729-600-27	TRANSISTOR 2SC634SP				
Q304	8-729-600-27	TRANSISTOR 2SC634SP				
Q305	8-729-204-83	TRANSISTOR 2SA1048-GR				
Q306	8-729-600-27	TRANSISTOR 2SC634SP				
Q307	8-729-204-83	TRANSISTOR 2SA1048-GR				
Q308	8-729-201-04	TRANSISTOR 2SC2878				
Q309	8-729-600-27	TRANSISTOR 2SC634SP				
Q310	8-729-204-83	TRANSISTOR 2SA1048-GR				
Q311	8-729-600-27	TRANSISTOR 2SC634SP				
		RESISTOR				
R001	1-249-410-11	CARBON	270	5%	1/4W	
R002	1-249-413-11	CARBON	470	5%	1/4W	
R003	1-249-441-11	CARBON	100K	5%	1/4W	
R004	1-249-441-11	CARBON	100K	5%	1/4W	
R007	1-249-423-11	CARBON	3.3K	5%	1/4W	
R008	1-249-413-11	CARBON	470	5%	1/4W	
R009	1-215-493-00	CARBON	1M	5%	1/4W	
R010	1-249-441-11	CARBON	100K	5%	1/4W	
R012	1-249-417-11	CARBON	1K	5%	1/4W	
R013	1-249-435-11	CARBON	33K	5%	1/4W	
R014	1-249-435-11	CARBON	33K	5%	1/4W	
R015	1-249-417-11	CARBON	1K	5%	1/4W	
R016	1-249-435-11	CARBON	33K	5%	1/4W	
R017	1-249-421-11	CARBON	2.2K	5%	1/4W	
R201	1-249-435-11	CARBON	33K	5%	1/4W	
R202	1-249-435-11	CARBON	33K	5%	1/4W	
R203	1-249-441-11	CARBON	100K	5%	1/4W	
R204	1-249-431-11	CARBON	15K	5%	1/4W	
R205	1-247-887-00	CARBON	220K	5%	1/4W	
R206	1-215-483-00	CARBON	390K	5%	1/4W	
R207	1-249-413-11	CARBON	470	5%	1/4W	
R208	1-249-431-11	CARBON	15K	5%	1/4W	
R209	1-247-887-00	CARBON	220K	5%	1/4W	
R210	1-215-487-00	CARBON	560K	5%	1/4W	
R211	1-249-431-11	CARBON	15K	5%	1/4W	

When indicating parts by reference number, please include the board name.

Ref.No	Part No.	Description				Remark
R225	1-249-435-11	CARBON	33K	5%	1/4W	
R226	1-249-435-11	CARBON	33K	5%	1/4W	
R227	1-249-429-11	CARBON	10K	5%	1/4W	
R228	1-249-421-11	CARBON	2.2K	5%	1/4W	
R229	1-249-436-11	CARBON	39K	5%	1/4W	
R230	1-249-425-11	CARBON	4.7K	5%	1/4W	
R233	1-247-887-00	CARBON	220K	5%	1/4W	
R234	1-249-436-11	CARBON	39K	5%	1/4W	
R235	1-249-433-11	CARBON	22K	5%	1/4W	
R236	1-249-429-11	CARBON	10K	5%	1/4W	
R237	1-249-441-11	CARBON	100K	5%	1/4W	
R238	1-247-881-00	CARBON	120K	5%	1/4W	
R239	1-249-440-11	CARBON	82K	5%	1/4W	
R240	1-249-437-11	CARBON	47K	5%	1/4W	
R241	1-247-887-00	CARBON	220K	5%	1/4W	
R242	1-247-887-00	CARBON	220K	5%	1/4W	
R243	1-247-887-00	CARBON	220K	5%	1/4W	
R244	1-249-405-11	CARBON	100	5%	1/4W	
R245	1-247-895-00	CARBON	470K	5%	1/4W	
R246	1-215-483-00	CARBON	390K	5%	1/4W	
R247	1-249-437-11	CARBON	47K	5%	1/4W	
R248	1-249-441-11	CARBON	100K	5%	1/4W	
R249	1-249-439-11	CARBON	68K	5%	1/4W	
R250	1-215-458-00	CARBON	36K	5%	1/4W	
R251	1-249-435-11	CARBON	33K	5%	1/4W	
R252	1-249-425-11	CARBON	4.7K	5%	1/4W	
R253	1-249-435-11	CARBON	33K	5%	1/4W	
R254	1-215-452-00	METAL	20K	1%	1/6W	
R255	1-215-469-00	METAL	100K	1%	1/6W	
R256	1-249-422-11	CARBON	2.7K	5%	1/4W	
R257	1-249-429-11	CARBON	10K	5%	1/4W	
R258	1-249-433-11	CARBON	22K	5%	1/4W	
R259	1-249-434-11	CARBON	27K	5%	1/4W	
R260	1-215-446-00	CARBON	11K	5%	1/4W	
R261	1-249-417-11	CARBON	1K	5%	1/4W	
R262	1-249-429-11	CARBON	10K	5%	1/4W	
R263	1-249-432-11	CARBON	18K	5%	1/4W	
R264	1-249-421-11	CARBON	2.2K	5%	1/4W	
R265	1-249-423-11	CARBON	3.3K	5%	1/4W	
R266	1-249-435-11	CARBON	33K	5%	1/4W	
R267	1-249-429-11	CARBON	10K	5%	1/4W	
R268	1-249-425-11	CARBON	4.7K	5%	1/4W	
R269	1-249-437-11	CARBON	47K	5%	1/4W	
R270	1-249-431-11	CARBON	15K	5%	1/4W	
R271	1-215-466-00	CARBON	75K	5%	1/4W	
R273	1-249-440-11	CARBON	82K	5%	1/4W	
R274	1-249-417-11	CARBON	1K	5%	1/4W	
R275	1-249-441-11	CARBON	100K	5%	1/4W	
R301	1-249-433-11	CARBON	22K	5%	1/4W	
R302	1-249-437-11	CARBON	47K	5%	1/4W	
R303	1-249-436-11	CARBON	39K	5%	1/4W	
R304	1-247-883-00	CARBON	150K	5%	1/4W	
R307	1-249-425-11	CARBON	4.7K	5%	1/4W	
R308	1-249-433-11	CARBON	22K	5%	1/4W	
R309	1-247-883-00	CARBON	150K	5%	1/4W	
R310	1-249-405-11	CARBON	100	5%	1/4W	
R311	1-249-437-11	CARBON	47K	5%	1/4W	
R312	1-249-433-11	CARBON	22K	5%	1/4W	
R313	1-249-433-11	CARBON	22K	5%	1/4W	
R314	1-249-433-11	CARBON	22K	5%	1/4W	
R315	1-247-895-00	CARBON	470K	5%	1/4W	
R316	1-247-895-00	CARBON	470K	5%	1/4W	
R317	1-249-425-11	CARBON	4.7K	5%	1/4W	
R318	1-249-425-11	CARBON	4.7K	5%	1/4W	
R319	1-249-432-11	CARBON	18K	5%	1/4W	
R320	1-249-429-11	CARBON	10K	5%	1/4W	
R321	1-249-425-11	CARBON	4.7K	5%	1/4W	
R322	1-249-413-11	CARBON	470	5%	1/4W	
R323	1-249-433-11	CARBON	22K	5%	1/4W	
R324	1-249-437-11	CARBON	47K	5%	1/4W	
R325	1-249-429-11	CARBON	10K	5%	1/4W	
R326	1-249-425-11	CARBON	4.7K	5%	1/4W	
R327	1-249-429-11	CARBON	10K	5%	1/4W	
R328	1-249-429-11	CARBON	10K	5%	1/4W	
R329	1-249-431-11	CARBON	15K	5%	1/4W	
R330	1-249-429-11	CARBON	10K	5%	1/4W	

COMPOSITION CIRCUIT BLOCK

RB001	1-233-026-11	COMPOSITION CIRCUIT BLOCK
RB002	1-233-026-11	COMPOSITION CIRCUIT BLOCK
RB003	1-233-026-11	COMPOSITION CIRCUIT BLOCK
RB004	1-233-026-11	COMPOSITION CIRCUIT BLOCK

TIMMER

TM001	1-548-119-21	CLOCK

CERAMIC

X001	1-567-133-00	VIBLATOR, CERAMIC

****

*A-6421-198-A	SV-29 BOARD, COMPLETE
	**********
*4-363-146-00	HEAT SINK, V.OUT
7-682-647-09	SCREW +PS 3X6
7-685-645-79	SCREW +BVTP 3X6 TYPE2 IT-3
7-685-645-79	SCREW +BVTP 3X6 TYPE2
7-685-647-79	SCREW +BVTP 3X10 TYPE2 IT-3
7-685-647-79	SCREW +BVTP 3X10 TYPE2

CAPACITOR

C001	1-123-380-00	ELECT	1MF	20%	50V
C002	1-161-379-00	CERAMIC	0.01MF	30%	16V
C003	1-161-379-00	CERAMIC	0.01MF	30%	16V
C004	1-123-306-00	ELECT	47MF	20%	10V
C005	1-124-499-11	ELECT	1MF	20%	50V

When indicating parts by reference number, please include the board name.

SV-29

Ref.No	Part No.	Description				Remark
C006	1-124-499-11	ELECT	1MF	20%	50V	
C007	1-130-475-00	MYLAR	0.0022MF	5%	50V	
C008	1-136-169-00	MYLAR	0.22MF	5%	50V	
C009	1-130-468-00	MYLAR	560PF	5%	50V	
C010	1-130-487-00	MYLAR	0.022MF	5%	50V	
C011	1-130-487-00	MYLAR	0.022MF	5%	50V	
C013	1-126-099-11	ELECT	2.2MF	20%	35V	
C014	1-130-473-00	MYLAR	0.0015MF	5%	50V	
C015	1-130-481-00	MYLAR	0.0068MF	5%	50V	
C016	1-130-481-00	MYLAR	0.0068MF	5%	50V	
C017	1-130-468-00	MYLAR	560PF	5%	50V	
C018	1-161-379-00	CERAMIC	0.01MF	30%	16V	
C019	1-123-306-00	ELECT	47MF	20%	10V	
C020	1-130-471-00	MYLAR	0.001MF	5%	50V	
C021	1-136-169-00	MYLAR	0.22MF	5%	50V	
C022	1-130-488-00	MYLAR	0.027MF	5%	50V	
C023	1-130-488-00	MYLAR	0.027MF	5%	50V	
C024	1-162-282-31	CERAMIC	100PF	10%	50V	
C025	1-124-283-00	ELECT	4.7MF	20%	16V	
C026	1-130-489-00	MYLAR	0.033MF	5%	50V	
C027	1-162-294-31	CERAMIC	0.001MF	10%	50V	
C028	1-130-483-00	MYLAR	0.01MF	5%	50V	
C029	1-162-219-31	CERAMIC	68PF	5%	50V	
C030	1-161-051-00	CERAMIC	0.01MF	10%	50V	
C032	1-130-489-00	MYLAR	0.033MF	5%	50V	
C033	1-162-187-31	CERAMIC	1PF	20%	50V	
C034	1-123-330-00	ELECT	22MF	20%	25V	
C035	1-161-051-00	CERAMIC	0.01MF	10%	50V	
C036	1-161-379-00	CERAMIC	0.01MF	30%	16V	
C037	1-123-330-00	ELECT	22MF	20%	25V	
C038	1-130-491-00	MYLAR	0.047MF	5%	50V	
C039	1-130-489-00	MYLAR	0.033MF	5%	50V	
C040	1-123-330-00	ELECT	22MF	20%	25V	
C041	1-123-330-00	ELECT	22MF	20%	25V	
C042	1-123-330-00	ELECT	22MF	20%	16V	
C043	1-123-330-00	ELECT	22MF	20%	16V	
C044	1-161-379-00	CERAMIC	0.01MF	30%	16V	
C045	1-161-379-00	CERAMIC	0.01MF	30%	16V	
C101	1-107-093-00	MICA	220PF	5%	50V	
C102	1-130-475-00	MYLAR	0.0022MF	5%	50V	
C103	1-162-282-31	CERAMIC	100PF	10%	50V	
C104	1-123-357-00	ELECT	22MF	20%	35V	
C105	1-130-467-00	MYLAR	470PF	5%	50V	
C106	1-130-481-00	MYLAR	0.0068MF	5%	50V	
C107	1-130-469-00	MYLAR	680PF	5%	50V	
C108	1-123-359-00	ELECT	47MF	20%	50V	
C109	1-123-359-00	ELECT	47MF	20%	50V	
C110	1-123-356-00	ELECT	10MF	20%	25V	
C111	1-124-124-00	ELECT	220MF	20%	6.3V	

CONNECTOR

CN001	*1-560-900-41	PIN, CONNECTOR 12P
CN002	*1-560-896-00	PIN, CONNECTOR 8P
CN003	*1-560-896-00	PIN, CONNECTOR 8P
CN005	*1-560-896-00	PIN, CONNECTOR 8P
CN006	*1-560-891-00	PIN, CONNECTOR 3P
CN007	*1-560-890-00	PIN, CONNECTOR 2P

DIODE

D001	8-719-911-19	DIODE 1SS119
D002	8-719-911-19	DIODE 1SS119
D003	8-719-911-19	DIODE 1SS119
D004	8-719-911-19	DIODE 1SS119
D005	8-719-911-19	DIODE 1SS119
D006	8-719-110-13	DIODE RD9.1ES-B2
D007	8-719-911-19	DIODE 1SS119
D008	8-719-911-19	DIODE 1SS119
D009	8-719-911-19	DIODE 1SS119
D010	8-719-911-19	DIODE 1SS119
D011	8-719-911-19	DIODE 1SS119
D012	8-719-911-19	DIODE 1SS119
D101	8-719-911-19	DIODE 1SS119
D102	8-719-911-19	DIODE 1SS119
D103	8-719-911-19	DIODE 1SS119
D104	8-719-911-19	DIODE 1SS119
D105	8-719-924-06	DIODE ERC24-06S
D106	8-719-911-19	DIODE 1SS119

IC

IC001	8-759-912-76	IC PM4001
IC003	8-759-145-58	IC UPC4558C
IC004	8-759-145-58	IC UPC4558C
IC005	8-759-700-04	IC NJM2043D-D
IC101	8-759-240-69	IC TC4069UBP
IC102	8-759-145-58	IC UPC4558C
IC103	8-759-145-58	IC UPC4558C

COIL

L101	1-410-305-12	COIL, CHOKE 400UH
L102	1-410-339-11	COIL, CHOKE 10UH

IC LINK

PS001⚠	1-532-605-00	LINK, IC
PS002⚠	1-532-605-00	LINK, IC
PS003⚠	1-532-637-21	LINK, IC
PS004⚠	1-532-637-21	LINK, IC
PS005⚠	1-532-637-21	LINK, IC
PS006⚠	1-532-637-21	LINK, IC
PS101⚠	1-532-679-21	LINK, IC

TRANSISTOR

Q001	8-729-600-27	TRANSISTOR 2SC634SP
Q003	8-729-600-27	TRANSISTOR 2SC634SP
Q004	8-729-204-83	TRANSISTOR 2SA1048-GR
Q005	8-729-204-83	TRANSISTOR 2SC2458GR
Q006	8-729-600-27	TRANSISTOR 2SC634SP

The components identified by mark ⚠ are critical for safety.
Replace only with part number specified.

Les composants identifiés par une marque ⚠ sont critiques pour la sécurité.
Ne les remplacer que par une pièce portant le numéro spécifié.

When indicating parts by reference number, please include the board name.

Ref.No	Part No.	Description	Remark
Q007	8-729-218-42	TRANSISTOR 2SK184	
Q008	8-729-218-42	TRANSISTOR 2SK184	
Q009	8-729-218-42	TRANSISTOR 2SK184	
Q010	8-729-804-17	TRANSISTOR 2SD1666-R	
Q011	8-729-804-67	TRANSISTOR 2SB1133-R	
Q012	8-729-804-91	TRANSISTOR 2SD1682-S	
Q013	8-729-204-83	TRANSISTOR 2SA1048-GR	
Q014	8-729-804-91	TRANSISTOR 2SD1682-S	
Q015	8-729-804-86	TRANSISTOR 2SB1142-S	
Q016	8-729-900-63	TRANSISTOR DTA124ES	
Q017	8-729-600-27	TRANSISTOR 2SC634SP	
Q018	8-729-600-27	TRANSISTOR 2SC634SP	
Q019	8-729-218-42	TRANSISTOR 2SK184	
Q101	8-729-600-27	TRANSISTOR 2SC634SP	
Q102	8-729-600-27	TRANSISTOR 2SC634SP	
Q103	8-729-600-27	TRANSISTOR 2SC634SP	
Q104	8-729-600-27	TRANSISTOR 2SC634SP	
Q105	8-729-200-28	TRANSISTOR 2SA1048TP-Y	
Q106	8-729-177-43	TRANSISTOR 2SD774	
Q107	8-729-201-54	TRANSISTOR 2SC2562-O	
Q108	8-729-600-27	TRANSISTOR 2SC634SP	
Q109	8-729-804-86	TRANSISTOR 2SB1142-S	
Q110	8-729-600-27	TRANSISTOR 2SC634SP	
Q111	8-729-600-27	TRANSISTOR 2SC634SP	
Q112	8-729-900-63	TRANSISTOR DTA124ES	
Q113	8-729-200-28	TRANSISTOR 2SA1048TP-Y	

RESISTOR

Ref.No	Part No.	Description				Remark
R001	1-249-417-11	CARBON	1K	5%	1/4W	
R002	1-215-491-00	CARBON	820K	5%	1/4W	
R003	1-249-435-11	CARBON	33K	5%	1/4W	
R004	1-249-429-11	CARBON	10K	5%	1/4W	
R005	1-249-439-11	CARBON	68K	5%	1/4W	
R006	1-249-434-11	CARBON	27K	5%	1/4W	
R007	1-249-417-11	CARBON	1K	5%	1/4W	
R008	1-249-421-11	CARBON	2.2K	5%	1/4W	
R010	1-249-405-11	CARBON	100	5%	1/4W	
R011	1-249-432-11	CARBON	18K	5%	1/4W	
R012	1-247-895-00	CARBON	470K	5%	1/4W	
R013	1-249-431-11	CARBON	15K	5%	1/4W	
R014	1-249-433-11	CARBON	22K	5%	1/4W	
R015	1-249-438-11	CARBON	56K	5%	1/4W	
R016	1-249-433-11	CARBON	22K	5%	1/4W	
R017	1-249-419-11	CARBON	1.5K	5%	1/4W	
R018	1-249-424-11	CARBON	3.9K	5%	1/4W	
R019	1-249-437-11	CARBON	47K	5%	1/4W	
R020	1-249-427-11	CARBON	6.8K	5%	1/4W	
R021	1-249-436-11	CARBON	39K	5%	1/4W	
R022	1-249-429-11	CARBON	10K	5%	1/4W	
R023	1-247-885-00	CARBON	180K	5%	1/4W	
R024	1-249-433-11	CARBON	22K	5%	1/4W	
R025	1-215-487-00	CARBON	560K	5%	1/4W	
R026	1-249-401-11	CARBON	47	5%	1/4W	
R027	1-249-401-11	CARBON	47	5%	1/4W	
R028	1-249-401-11	CARBON	47	5%	1/4W	
R031	1-249-429-11	CARBON	10K	5%	1/4W	
R032	1-249-441-11	CARBON	100K	5%	1/4W	
R033	1-249-427-11	CARBON	6.8K	5%	1/4W	
R034	1-247-887-00	CARBON	220K	5%	1/4W	
R035	1-215-487-00	CARBON	560K	5%	1/4W	
R036	1-249-429-11	CARBON	10K	5%	1/4W	
R037	1-249-429-11	CARBON	10K	5%	1/4W	
R038	1-249-430-11	CARBON	12K	5%	1/4W	
R039	1-249-438-11	CARBON	56K	5%	1/4W	
R040	1-247-883-00	CARBON	150K	5%	1/4W	
R041	1-247-881-00	CARBON	120K	5%	1/4W	
R042	1-249-438-11	CARBON	56K	5%	1/4W	
R043	1-249-418-11	CARBON	1.2K	5%	1/4W	
R044	1-249-423-11	CARBON	3.3K	5%	1/4W	
R045	1-249-441-11	CARBON	100K	5%	1/4W	
R046	1-249-420-11	CARBON	1.8K	5%	1/4W	
R047	1-249-441-11	CARBON	100K	5%	1/4W	
R048	1-249-435-11	CARBON	33K	5%	1/4W	
R049	1-249-425-11	CARBON	4.7K	5%	1/4W	
R050	1-249-431-11	CARBON	15K	5%	1/4W	
R051	1-249-435-11	CARBON	33K	5%	1/4W	
R052	1-249-441-11	CARBON	100K	5%	1/4W	
R053	1-249-441-11	CARBON	100K	5%	1/4W	
R054	1-249-428-11	CARBON	8.2K	5%	1/4W	
R055	1-249-429-11	CARBON	10K	5%	1/4W	
R056	1-249-429-11	CARBON	10K	5%	1/4W	
R057	1-249-441-11	CARBON	100K	5%	1/4W	
R058	1-249-441-11	CARBON	100K	5%	1/4W	
R059	1-249-429-11	CARBON	10K	5%	1/4W	
R060	1-247-887-00	CARBON	220K	5%	1/4W	
R061	1-247-887-00	CARBON	220K	5%	1/4W	
R062	1-249-433-11	CARBON	22K	5%	1/4W	
R063	1-249-418-11	CARBON	1.2K	5%	1/4W	
R064	1-249-419-11	CARBON	1.5K	5%	1/4W	
R065	1-249-429-11	CARBON	10K	5%	1/4W	
R066	1-249-441-11	CARBON	100K	5%	1/4W	
R067	1-249-429-11	CARBON	10K	5%	1/4W	
R068	1-249-437-11	CARBON	47K	5%	1/4W	
R069	1-247-895-00	CARBON	470K	5%	1/4W	
R070	1-249-429-11	CARBON	10K	5%	1/4W	
R071	1-249-429-11	CARBON	10K	5%	1/4W	
R072	1-249-417-11	CARBON	1K	5%	1/4W	
R073	1-249-435-11	CARBON	33K	5%	1/4W	
R074	1-249-401-11	CARBON	47	5%	1/4W	
R077	1-249-425-11	CARBON	4.7K	5%	1/4W	
R078	1-249-426-11	CARBON	5.6K	5%	1/4W	
R079	1-249-401-11	CARBON	47	5%	1/4W	
R080	1-249-428-11	CARBON	8.2K	5%	1/4W	
R083	1-249-405-11	CARBON	100	5%	1/4W	
R084 ⚠	1-216-371-00	METAL OXIDE	1.5	5%	2W	F
R085	1-249-417-11	CARBON	1K	5%	1/4W	

The components identified by mark ⚠ are critical for safety.
Replace only with part number specified.

Les composants identifiés par une marque ⚠ sont critiques pour la sécurité.
Ne les remplacer que par une pièce portant le numéro spécifié.

When indicating parts by reference number, please include the board name.

SV-29 VP-10

Ref.No	Part No.	Description				Remark
R086	1-249-401-11	CARBON	47	5%	1/4W	
R087	1-249-435-11	CARBON	33K	5%	1/4W	
R090	1-249-425-11	CARBON	4.7K	5%	1/4W	
R091	1-249-405-11	CARBON	100	5%	1/4W	
R092	⚠1-216-369-00	METAL OXIDE	1	5%	2W	F
R093	1-249-432-11	CARBON	18K	5%	1/4W	
R098	1-249-413-11	CARBON	470	5%	1/4W	
R099	1-249-427-11	CARBON	6.8K	5%	1/4W	
R101	1-249-436-11	CARBON	39K	5%	1/4W	
R102	1-247-883-00	CARBON	150K	5%	1/4W	
R103	1-249-433-11	CARBON	22K	5%	1/4W	
R104	1-249-427-11	CARBON	6.8K	5%	1/4W	
R105	1-249-420-11	CARBON	1.8K	5%	1/4W	
R106	1-249-430-11	CARBON	12K	5%	1/4W	
R107	1-249-429-11	CARBON	10K	5%	1/4W	
R108	1-249-417-11	CARBON	1K	5%	1/4W	
R109	1-249-417-11	CARBON	1K	5%	1/4W	
R110	1-249-417-11	CARBON	1K	5%	1/4W	
R111	1-249-429-11	CARBON	10K	5%	1/4W	
R112	1-249-430-11	CARBON	12K	5%	1/4W	
R113	1-249-428-11	CARBON	8.2K	5%	1/4W	
R114	1-249-429-11	CARBON	10K	5%	1/4W	
R115	1-249-429-11	CARBON	10K	5%	1/4W	
R116	1-249-397-11	CARBON	22	5%	1/4W	
R117	1-249-441-11	CARBON	100K	5%	1/4W	
R118	1-247-881-00	CARBON	120K	5%	1/4W	
R119	1-247-881-00	CARBON	120K	5%	1/4W	
R120	1-249-429-11	CARBON	10K	5%	1/4W	
R121	1-249-439-11	CARBON	68K	5%	1/4W	
R122	1-249-430-11	CARBON	12K	5%	1/4W	
R123	1-249-436-11	CARBON	39K	5%	1/4W	
R124	1-249-429-11	CARBON	10K	5%	1/4W	
R125	1-249-423-11	CARBON	3.3K	5%	1/4W	
R126	1-249-413-11	CARBON	470	5%	1/4W	
R127	1-249-420-11	CARBON	1.8K	5%	1/4W	
R128	1-249-405-11	CARBON	100	5%	1/4W	
R129	⚠1-216-390-11	METAL OXIDE	1.2	5%	3W	F
R130	1-215-453-00	METAL	22K	1%	1/6W	
R131	1-215-453-00	METAL	22K	1%	1/6W	
R132	1-215-451-00	METAL	18K	1%	1/6W	
R133	1-215-451-00	METAL	18K	1%	1/6W	
R134	1-249-429-11	CARBON	10K	5%	1/4W	
R135	1-249-409-11	CARBON	220	5%	1/4W	
R136	1-249-419-11	CARBON	1.5K	5%	1/4W	
R137	1-249-433-11	CARBON	22K	5%	1/4W	
R138	1-249-429-11	CARBON	10K	5%	1/4W	
R139	1-249-431-11	CARBON	15K	5%	1/4W	
R140	1-249-436-11	CARBON	39K	5%	1/4W	
R141	1-249-439-11	CARBON	68K	5%	1/4W	
R142	1-247-895-00	CARBON	470K	5%	1/4W	
R150	1-249-387-11	CARBON	3.3	5%	1/4W	
R151	1-249-387-11	CARBON	3.3	5%	1/4W	
R152	1-249-421-11	CARBON	2.2K	5%	1/4W	

The components identified by mark ⚠ are critical for safety.
Replace only with part number specified.

Les composants identifiés par une marque ⚠ sont critiques pour la sécurité.
Ne les remplacer que par une pièce portant le numéro spécifié.

When indicating parts by reference number, please include the board name.

Ref.No	Part No.	Description				Remark
		VARIABLE RESISTOR				
RV001	1-230-498-11	RES, ADJ, CARBON 47K				
RV002	1-230-720-11	RES, ADJ, CARBON 4.7K				
RV101	1-228-995-00	RES, ADJ, CARBON 22K				
**********						
	*A-6421-203-A	VP-10 BOARD, COMPLETE **********				
	*1-561-724-00	SOCKET, CONNECTOR 2P				
	*3-710-317-01	PLATE, GROUND				
	*3-710-318-01	CASE (VP), SHIELD				
		JACK BOARD				
A401	1-536-985-11	JACK BOARD (P)				
		CAPACITOR				
C001	1-123-332-00	ELECT	47MF	20%	16V	
C002	1-123-356-00	ELECT	10MF	20%	16V	
C003	1-162-211-31	CERAMIC	33PF	5%	50V	
C004	1-130-495-00	MYLAR	0.1MF	5%	50V	
C005	1-161-379-00	CERAMIC	0.01MF	20%	16V	
C006	1-124-463-00	ELECT	0.1MF	20%	50V	
C007	1-123-356-00	ELECT	10MF	20%	16V	
C008	1-123-332-00	ELECT	47MF	20%	16V	
C009	1-162-201-31	CERAMIC	12PF	5%	50V	
C010	1-162-201-31	CERAMIC	12PF	5%	50V	
C011	1-124-462-00	ELECT	10MF	20%	16V	
C012	1-123-356-00	ELECT	10MF	20%	16V	
C013	1-123-332-00	ELECT	47MF	20%	16V	
C014	1-162-215-31	CERAMIC	47PF	5%	50V	
C015	1-102-978-00	CERAMIC	220PF	5%	50V	
C016	1-161-375-00	CERAMIC	0.0022MF	30%	16V	
C017	1-102-978-00	CERAMIC	220PF	5%	50V	
C018	1-124-462-00	ELECT	10MF	20%	16V	
C019	1-123-356-00	ELECT	10MF	20%	16V	
C020	1-162-215-31	CERAMIC	47PF	5%	50V	
C021	1-162-286-31	CERAMIC	220PF	10%	50V	
C022	1-130-485-00	MYLAR	0.015MF	5%	50V	
C023	1-124-465-00	ELECT	0.47MF	20%	50V	
C024	1-123-306-00	ELECT	47MF	20%	10V	
C025	1-123-306-00	ELECT	47MF	20%	10V	
C026	1-162-292-31	CERAMIC	680PF	10%	50V	
C027	1-130-494-11	MYLAR	0.082MF	5%	50V	
C028	1-162-288-31	CERAMIC	330PF	10%	50V	
C029	1-162-288-31	CERAMIC	330PF	10%	50V	
C030	1-124-124-00	ELECT	220MF	20%	6.3V	
C031	1-124-499-11	ELECT	1MF	20%	50V	
C032	1-126-101-11	ELECT	100MF	20%	10V	
C033	1-123-332-00	ELECT	47MF	20%	16V	
C034	1-123-332-00	ELECT	47MF	20%	16V	
C035	1-161-379-00	CERAMIC	0.01MF	20%	16V	

Ref.No	Part No.	Description			Remark
C036	1-126-101-11	ELECT	100MF	20%	10V
C037	1-126-101-11	ELECT	100MF	20%	10V
C038	1-161-021-11	CERAMIC	0.047MF	10%	25V
C039	1-123-306-00	ELECT	47MF	20%	10V
C040	1-161-021-11	CERAMIC	0.047MF	10%	25V
C041	1-101-004-00	CERAMIC	0.01MF		50V
C042	1-123-356-00	ELECT	10MF	20%	16V
C043	1-101-005-00	CERAMIC	0.022MF		50V
C044	1-107-206-00	MICA	15PF	5%	500V
C045	1-107-210-00	MICA	22PF	5%	500V
C047	1-161-055-00	CERAMIC	0.022MF	10%	25V
C048	1-123-306-00	ELECT	47MF	20%	10V
C049	1-162-280-31	CERAMIC	82PF	10%	50V
C050	1-162-219-31	CERAMIC	68PF	5%	50V
C051	1-123-330-00	ELECT	22MF	20%	16V
C052	1-162-198-31	CERAMIC	8.2PF	10%	50V
C053	1-162-215-31	CERAMIC	47PF	5%	50V
C054	1-162-207-31	CERAMIC	22PF	5%	50V
C055	1-162-196-31	CERAMIC	5.6PF	10%	50V
C056	1-124-236-00	ELECT	47MF	20%	10V
C057	1-124-224-00	ELECT	47MF	20%	6.3V
C058	1-123-306-00	ELECT	47MF	20%	10V
C059	1-124-463-00	ELECT	0.1MF	20%	50V
C060	1-124-255-00	ELECT	1MF	20%	50V
C061	1-162-282-31	CERAMIC	100PF	10%	50V
C062	1-162-288-31	CERAMIC	330PF	10%	50V
C064	1-124-270-11	ELECT	0.47MF	20%	50V
C065	1-124-236-00	ELECT	47MF	20%	10V
C066	1-126-101-11	ELECT	100MF	20%	10V
C067	1-162-280-31	CERAMIC	82PF	10%	50V
C068	1-162-211-31	CERAMIC	33PF	5%	50V
C069	1-162-211-31	CERAMIC	33PF	5%	50V
C070	1-162-203-31	CERAMIC	15PF	5%	50V
C071	1-162-290-31	CERAMIC	470PF	10%	50V
C080	1-161-021-11	CERAMIC	0.047MF	10%	25V
C081	1-161-021-11	CERAMIC	0.047MF	10%	25V
C082	1-161-021-11	CERAMIC	0.047MF	10%	25V
C083	1-161-021-11	CERAMIC	0.047MF	10%	25V
C084	1-161-021-11	CERAMIC	0.047MF	10%	25V
C085	1-161-021-11	CERAMIC	0.047MF	10%	25V
C090	1-123-332-00	ELECT	47MF	20%	16V
C101	1-123-332-00	ELECT	47MF	20%	16V
C102	1-123-306-00	ELECT	47MF	20%	10V
C103	1-162-282-31	CERAMIC	100PF	10%	50V
C104	1-101-005-00	CERAMIC	0.022MF		50V
C105	1-162-283-31	CERAMIC	120PF	10%	50V
C106	1-123-306-00	ELECT	47MF	20%	10V
C107	1-101-005-00	CERAMIC	0.022MF		50V
C108	1-130-495-00	MYLAR	0.1MF	5%	50V
C109	1-101-005-00	CERAMIC	0.022MF		50V
C110	1-124-463-00	ELECT	0.1MF	20%	50V
C111	1-161-379-00	CERAMIC	0.01MF	20%	16V
C112	1-123-306-00	ELECT	47MF	20%	10V

Ref.No	Part No.	Description			Remark
C113	1-161-379-00	CERAMIC	0.01MF	20%	16V
C114	1-162-196-31	CERAMIC	5.6PF	10%	50V
C115	1-162-282-31	CERAMIC	100PF	10%	50V
C116	1-162-290-31	CERAMIC	470PF	10%	50V
C117	1-162-282-31	CERAMIC	100PF	10%	50V
C118	1-161-379-00	CERAMIC	0.01MF	20%	16V
C119	1-161-379-00	CERAMIC	0.01MF	20%	16V
C120	1-161-379-00	CERAMIC	0.01MF	20%	16V
C121	1-161-379-00	CERAMIC	0.01MF	20%	16V
C122	1-162-290-31	CERAMIC	470PF	10%	50V
C123	1-161-379-00	CERAMIC	0.01MF	20%	16V
C124	1-161-379-00	CERAMIC	0.01MF	20%	16V
C125	1-162-203-31	CERAMIC	15PF	5%	50V
C126	1-162-219-31	CERAMIC	68PF	5%	50V
C127	1-162-209-31	CERAMIC	27PF	5%	50V
C128	1-162-219-31	CERAMIC	68PF	5%	50V
C129	1-162-209-31	CERAMIC	27PF	5%	50V
C130	1-162-201-31	CERAMIC	12PF	5%	50V
C131	1-162-209-31	CERAMIC	27PF	5%	50V
C132	1-162-207-31	CERAMIC	22PF	5%	50V
C133	1-162-282-31	CERAMIC	100PF	10%	50V
C134	1-162-211-31	CERAMIC	33PF	5%	50V
C135	1-123-306-00	ELECT	47MF	20%	10V
C136	1-123-332-00	ELECT	47MF	20%	16V
C137	1-123-306-00	ELECT	47MF	20%	10V
C138	1-162-282-31	CERAMIC	100PF	10%	50V
C139	1-162-280-31	CERAMIC	82PF	10%	50V
C140	1-161-379-00	CERAMIC	0.01MF	20%	16V
C142	1-123-380-00	ELECT	1MF	20%	50V
C143	1-130-499-00	MYLAR	0.22MF	5%	50V
C144	1-123-380-00	ELECT	1MF	20%	50V
C145	1-123-306-00	ELECT	47MF	20%	10V
C146	1-123-332-00	ELECT	47MF	20%	16V
C147	1-162-211-31	CERAMIC	33PF	5%	50V
C148	1-123-306-00	ELECT	47MF	20%	10V
C149	1-124-443-00	ELECT	100MF	20%	6.3V
C150	1-124-443-00	ELECT	100MF	20%	6.3V
C151	1-162-291-31	CERAMIC	560PF	10%	50V
C152	1-123-356-00	ELECT	10MF	20%	16V
C153	1-123-306-00	ELECT	47MF	20%	10V
C154	1-124-442-00	ELECT	330MF	20%	6.3V
C156	1-124-442-00	ELECT	330MF	20%	6.3V
C157	1-162-193-31	CERAMIC	3.3PF	10%	50V
C158	1-162-196-31	CERAMIC	5.6PF	10%	50V
C159	1-162-203-31	CERAMIC	15PF	5%	50V
C160	1-124-443-00	ELECT	100MF	20%	6.3V
C161	1-123-306-00	ELECT	47MF	20%	10V
C201	1-124-224-00	ELECT	47MF	20%	6.3V
C202	1-130-479-00	MYLAR	0.0047MF	5%	50V
C203	1-162-291-31	CERAMIC	560PF	10%	50V
C204	1-130-495-00	MYLAR	0.1MF	5%	50V
C205	1-124-462-00	ELECT	10MF	20%	16V
C206	1-161-379-00	CERAMIC	0.01MF	20%	16V

When indicating parts by reference number, please include the board name.

VP-10

Ref.No	Part No.	Description				Remark
C207	1-162-215-31	CERAMIC	47PF	5%	50V	
C208	1-162-215-31	CERAMIC	47PF	5%	50V	
C209	1-124-224-00	ELECT	47MF	20%	6.3V	
C210	1-130-483-00	MYLAR	0.01MF	5%	50V	
C211	1-130-483-00	MYLAR	0.01MF	5%	50V	
C212	1-124-224-00	ELECT	47MF	20%	6.3V	
C213	1-130-483-00	MYLAR	0.01MF	5%	50V	
C214	1-130-477-00	MYLAR	0.0033MF	5%	50V	
C216	1-130-483-00	MYLAR	0.01MF	5%	50V	
C217	1-124-224-00	ELECT	47MF	20%	6.3V	
C218	1-124-224-00	ELECT	47MF	20%	6.3V	
C219	1-101-004-00	CERAMIC	0.01MF		50V	
C220	1-162-282-31	CERAMIC	100PF	10%	50V	
C221	1-162-286-31	CERAMIC	220PF	10%	50V	
C222	1-162-286-31	CERAMIC	220PF	10%	50V	
C223	1-162-282-31	CERAMIC	100PF	10%	50V	
C224	1-130-477-00	MYLAR	0.0033MF	5%	50V	
C225	1-130-471-00	MYLAR	0.001MF	5%	50V	
C226	1-161-021-11	CERAMIC	0.047MF	10%	25V	
C227	1-131-381-00	TANTALUM	47MF	20%	6.3V	
C401	1-107-157-00	MICA	27PF	5%	500V	
C402	1-107-204-00	MICA	12PF	5%	500V	
C403	1-130-487-00	MYLAR	0.022MF	5%	50V	
C404	1-130-467-00	MYLAR	470PF	5%	50V	
C405	1-107-159-00	MICA	33PF	5%	500V	
C406	1-107-077-00	MICA	47PF	5%	50V	
C407	1-162-207-31	CERAMIC	22PF	5%	50V	
C408	1-162-289-31	CERAMIC	390PF	10%	50V	
C409	1-130-491-00	MYLAR	0.047MF	5%	50V	
C410	1-123-332-00	ELECT	47MF	20%	16V	
C414	1-130-471-00	MYLAR	0.001MF	5%	50V	
C415	1-130-471-00	FILM	0.001MF	5%	50V	
C416	1-130-471-00	FILM	0.001MF	5%	50V	
C417	1-123-356-00	ELECT	10MF	20%	16V	
C418	1-123-356-00	ELECT	10MF	20%	16V	
C419	1-161-379-00	CERAMIC	0.01MF	20%	16V	
C421	1-161-379-00	CERAMIC	0.01MF	20%	16V	
C422	1-107-211-00	MICA	24PF	5%	500V	
C423	1-107-167-00	MICA	75PF	5%	50V	
C424	1-161-379-00	CERAMIC	0.01MF	20%	16V	
C425	1-123-369-00	ELECT	4.7MF	20%	25V	

FILTER

CF001	1-567-657-11	FILTER, CERAMIC (SFS-MA TYPE)

CONNECTOR

CN001	*1-560-894-00	PIN, CONNECTOR 6P
CN002	*1-560-891-00	PIN, CONNECTOR 3P
CN005	*1-560-894-00	PIN, CONNECTOR 6P
CN007	*1-560-898-00	PIN, CONNECTOR 10P
CN009	*1-560-896-00	PIN, CONNECTOR 8P

TRIMMER

CV401	1-141-227-00	CAP, CERAMIC TRIMMER

DIODE

D003	8-719-921-19	DIODE 1SS119TG
D401	8-719-907-19	DIODE FC52M-5
D402	8-719-921-19	DIODE 1SS119TG

IC

IC001	8-752-321-89	IC CXL5003P
IC002	8-752-006-10	IC CX20061
IC003	8-759-912-64	IC PA0009
IC004	8-752-320-31	IC CXL1004P
IC005	8-759-950-07	IC SN75107BN
IC006	8-759-912-67	IC PA9003
IC007	8-759-220-00	IC TC40H000P
IC008	8-759-220-04	IC TC40H004P
IC101	8-752-321-89	IC CXL5003P
IC102	8-759-927-56	IC BA7021
IC103	8-759-200-60	IC TA7060AP
IC201	8-752-030-44	IC CXA1018S
IC202	8-759-902-21	IC SN74LS221N
IC401	8-759-207-28	IC TC9015P
IC403	8-759-902-21	IC SN74LS221N
IC404	8-759-902-21	IC SN74LS221N
IC409	8-759-240-11	IC TC4011BP
IC410	8-759-240-53	IC TC4053BP
IC411	8-759-278-09	IC TA78L009AP
IC412	8-759-938-56	IC MB88201H-523M

COIL

L001	1-410-364-41	INDUCTOR	39UH
L002	1-410-336-11	INDUCTOR	220UH
L003	1-408-422-00	INDUCTOR	120UH
L004	1-410-328-11	INDUCTOR	10UH
L005	1-410-328-11	INDUCTOR	10UH
L006	1-410-328-11	INDUCTOR	10UH
L007	1-410-316-11	INDUCTOR	1UH
L008	1-410-334-11	INDUCTOR	100UH
L009	1-410-328-11	INDUCTOR	10UH
L010	1-410-328-11	INDUCTOR	10UH
L011	1-410-364-41	INDUCTOR	39UH
L012	1-408-414-00	INDUCTOR	27UH
L013	1-408-418-00	INDUCTOR	56UH
L014	1-410-328-11	INDUCTOR	10UH
L015	1-410-328-11	INDUCTOR	10UH
L016	1-408-412-00	INDUCTOR	18UH
L017	1-410-328-11	INDUCTOR	10UH
L018	1-410-328-11	INDUCTOR	10UH
L019	1-410-328-11	INDUCTOR	10UH
L020	1-410-328-11	INDUCTOR	10UH
L021	1-410-328-11	INDUCTOR	10UH

When indicating parts by reference number, please include the board name.

Ref.No	Part No.	Description		Remark
L022	1-410-331-11	INDUCTOR	33UH	
L101	1-410-328-11	INDUCTOR	10UH	
L102	1-410-328-11	INDUCTOR	10UH	
L103	1-408-419-00	INDUCTOR	68UH	
L104	1-408-411-00	INDUCTOR	15UH	
L105	1-408-417-00	INDUCTOR	47UH	
L107	1-410-328-11	INDUCTOR	10UH	
L108	1-408-419-00	INDUCTOR	68UH	
L109	1-408-417-00	INDUCTOR	47UH	
L110	1-410-328-11	INDUCTOR	10UH	
L111	1-408-417-00	INDUCTOR	47UH	
L112	1-410-364-41	INDUCTOR	39UH	
L113	1-410-336-11	INDUCTOR	220UH	
L114	1-410-331-11	INDUCTOR	33UH	
L115	1-410-328-11	INDUCTOR	10UH	
L116	1-410-328-11	INDUCTOR	10UH	
L201	1-410-328-11	INDUCTOR	10UH	
L202	1-410-328-11	INDUCTOR	10UH	
L203	1-410-328-11	INDUCTOR	10UH	
L205	1-408-412-00	INDUCTOR	18UH	
L401	1-408-420-00	INDUCTOR	82UH	
L402	1-408-418-00	INDUCTOR	56UH	
L403	1-408-401-00	INDUCTOR	2.2UH	
L404	1-410-328-11	INDUCTOR	10UH	

TRANSISTOR

Ref.No	Part No.	Description	Remark
Q002	8-729-600-27	TRANSISTOR 2SC634SP	
Q003	8-729-600-27	TRANSISTOR 2SC634SP	
Q004	8-729-600-27	TRANSISTOR 2SC634SP	
Q005	8-729-600-27	TRANSISTOR 2SC634SP	
Q006	8-729-600-27	TRANSISTOR 2SC634SP	
Q007	8-729-600-27	TRANSISTOR 2SC634SP	
Q008	8-729-600-27	TRANSISTOR 2SC634SP	
Q009	8-729-600-27	TRANSISTOR 2SC634SP	
Q010	8-729-204-83	TRANSISTOR 2SA1048-GR	
Q011	8-729-600-27	TRANSISTOR 2SC634SP	
Q012	8-729-204-83	TRANSISTOR 2SA1048-GR	
Q013	8-729-103-19	TRANSISTOR 2SA1206-K1	
Q014	8-729-190-12	TRANSISTOR 2SC2901-L	
Q015	8-729-600-27	TRANSISTOR 2SC634SP	
Q016	8-729-600-27	TRANSISTOR 2SC634SP	
Q017	8-729-204-83	TRANSISTOR 2SC1048-GR	
Q018	8-729-600-27	TRANSISTOR 2SC634SP	
Q019	8-729-218-43	TRANSISTOR 2SK184-GR	
Q020	8-729-600-27	TRANSISTOR 2SC634SP	
Q021	8-729-600-27	TRANSISTOR 2SC634SP	
Q101	8-729-600-27	TRANSISTOR 2SC634SP	
Q103	8-729-600-27	TRANSISTOR 2SC634SP	
Q104	8-729-600-27	TRANSISTOR 2SC634SP	
Q105	8-729-600-27	TRANSISTOR 2SC634SP	
Q106	8-729-600-27	TRANSISTOR 2SC634SP	
Q107	8-729-600-27	TRANSISTOR 2SC634SP	
Q108	8-729-600-27	TRANSISTOR 2SC634SP	
Q109	8-729-600-27	TRANSISTOR 2SC634SP	
Q110	8-729-600-27	TRANSISTOR 2SC634SP	
Q111	8-729-900-36	TRANSISTOR DTC124ES	
Q112	8-729-600-27	TRANSISTOR 2SC634SP	
Q113	8-729-600-27	TRANSISTOR 2SC634SP	
Q114	8-729-600-27	TRANSISTOR 2SC634SP	
Q115	8-729-600-27	TRANSISTOR 2SC634SP	
Q116	8-729-600-27	TRANSISTOR 2SC634SP	
Q117	8-729-200-29	TRANSISTOR 2SA1048TP-GR	
Q118	8-729-600-27	TRANSISTOR 2SC634SP	
Q119	8-729-600-27	TRANSISTOR 2SC634SP	
Q120	8-729-600-27	TRANSISTOR 2SC634SP	
Q121	8-729-600-27	TRANSISTOR 2SC634SP	
Q122	8-729-600-27	TRANSISTOR 2SC634SP	
Q123	8-729-600-27	TRANSISTOR 2SC634SP	
Q124	8-729-600-27	TRANSISTOR 2SC634SP	
Q125	8-729-600-27	TRANSISTOR 2SC634SP	
Q126	8-729-204-83	TRANSISTOR 2SA1048-GR	
Q127	8-729-600-27	TRANSISTOR 2SC634SP	
Q128	8-729-600-27	TRANSISTOR 2SC634SP	
Q129	8-729-600-27	TRANSISTOR 2SC634SP	
Q201	8-729-600-27	TRANSISTOR 2SC634SP	
Q203	8-729-600-27	TRANSISTOR 2SC634SP	
Q205	8-729-600-27	TRANSISTOR 2SC634SP	
Q207	8-729-900-63	TRANSISTOR DTA124ES	
Q209	8-729-900-63	TRANSISTOR DTA124ES	
Q401	8-729-900-36	TRANSISTOR DTC124ES	
Q402	8-729-600-27	TRANSISTOR 2SC634SP	
Q403	8-729-600-27	TRANSISTOR 2SC634SP	
Q405	8-729-600-27	TRANSISTOR 2SC634SP	

RESISTOR

Ref.No	Part No.	Description				Remark
R002	1-249-405-11	CARBON	100	5%	1/4W	
R003	1-249-425-11	CARBON	4.7K	5%	1/4W	
R004	1-249-417-11	CARBON	1K	5%	1/4W	
R005	1-249-425-11	CARBON	4.7K	5%	1/4W	
R006	1-215-493-00	CARBON	1M	5%	1/4W	
R007	1-249-429-11	CARBON	10K	5%	1/4W	
R008	1-249-413-11	CARBON	470	5%	1/4W	
R009	1-249-417-11	CARBON	1K	5%	1/4W	
R010	1-249-421-11	CARBON	2.2K	5%	1/4W	
R011	1-249-421-11	CARBON	2.2K	5%	1/4W	
R012	1-249-421-11	CARBON	2.2K	5%	1/4W	
R015	1-249-429-11	CARBON	10K	5%	1/4W	
R016	1-249-421-11	CARBON	2.2K	5%	1/4W	
R020	1-249-417-11	CARBON	1K	5%	1/4W	
R021	1-249-405-11	CARBON	100	5%	1/4W	
R022	1-249-427-11	CARBON	6.8K	5%	1/4W	
R023	1-249-441-11	CARBON	100K	5%	1/4W	
R025	1-249-426-11	CARBON	5.6K	5%	1/4W	
R026	1-249-430-11	CARBON	12K	5%	1/4W	
R027	1-249-421-11	CARBON	2.2K	5%	1/4W	
R028	1-249-426-11	CARBON	5.6K	5%	1/4W	

When indicating parts by reference number, please include the board name.

VP-10

Ref.No	Part No.	Description				Remark
R029	1-249-438-11	CARBON	56K	5%	1/4W	
R030	1-249-437-11	CARBON	47K	5%	1/4W	
R031	1-249-417-11	CARBON	1K	5%	1/4W	
R032	1-249-417-11	CARBON	1K	5%	1/4W	
R033	1-249-417-11	CARBON	1K	5%	1/4W	
R034	1-215-493-00	CARBON	1M	5%	1/4W	
R035	1-249-421-11	CARBON	2.2K	5%	1/4W	
R037	1-249-411-11	CARBON	330	5%	1/4W	
R038	1-249-421-11	CARBON	2.2K	5%	1/4W	
R039	1-249-413-11	CARBON	470	5%	1/4W	
R040	1-249-423-11	CARBON	3.3K	5%	1/4W	
R041	1-249-423-11	CARBON	3.3K	5%	1/4W	
R042	1-249-417-11	CARBON	1K	5%	1/4W	
R043	1-249-419-11	CARBON	1.5K	5%	1/4W	
R044	1-249-417-11	CARBON	1K	5%	1/4W	
R045	1-249-415-11	CARBON	680	5%	1/4W	
R046	1-249-425-11	CARBON	4.7K	5%	1/4W	
R047	1-249-417-11	CARBON	1K	5%	1/4W	
R048	1-249-418-11	CARBON	1.2K	5%	1/4W	
R049	1-249-417-11	CARBON	1K	5%	1/4W	
R050	1-249-425-11	CARBON	4.7K	5%	1/4W	
R051	1-249-417-11	CARBON	1K	5%	1/4W	
R052	1-249-421-11	CARBON	2.2K	5%	1/4W	
R053	1-249-429-11	CARBON	10K	5%	1/4W	
R054	1-249-429-11	CARBON	10K	5%	1/4W	
R055	1-249-441-11	CARBON	100K	5%	1/4W	
R056	1-249-405-11	CARBON	100	5%	1/4W	
P057	1-249-417-11	CARBON	1K	5%	1/4W	
R058	1-249-417-11	CARBON	1K	5%	1/4W	
R059	1-249-417-11	CARBON	1K	5%	1/4W	
R060	1-249-421-11	CARBON	2.2K	5%	1/4W	
R062	1-249-417-11	CARBON	1K	5%	1/4W	
R063	1-249-417-11	CARBON	1K	5%	1/4W	
R064	1-249-405-11	CARBON	100	5%	1/4W	
R065	1-249-424-11	CARBON	3.9K	5%	1/4W	
R066	1-249-417-11	CARBON	1K	5%	1/4W	
R067	1-249-417-11	CARBON	1K	5%	1/4W	
R101	1-249-417-11	CARBON	1K	5%	1/4W	
R102	1-249-417-11	CARBON	1K	5%	1/4W	
R103	1-249-421-11	CARBON	2.2K	5%	1/4W	
R104	1-215-493-00	CARBON	1M	5%	1/4W	
R105	1-249-429-11	CARBON	10K	5%	1/4W	
R107	1-249-426-11	CARBON	5.6K	5%	1/4W	
R108	1-249-417-11	CARBON	1K	5%	1/4W	
R109	1-249-417-11	CARBON	1K	5%	1/4W	
R110	1-249-425-11	CARBON	4.7K	5%	1/4W	
R111	1-249-422-11	CARBON	2.7K	5%	1/4W	
R112	1-249-413-11	CARBON	470	5%	1/4W	
R113	1-249-419-11	CARBON	1.5K	5%	1/4W	
R114	1-249-417-11	CARBON	1K	5%	1/4W	
R115	1-249-417-11	CARBON	1K	5%	1/4W	
R116	1-249-421-11	CARBON	2.2K	5%	1/4W	
R117	1-249-413-11	CARBON	470	5%	1/4W	

Ref.No	Part No.	Description				Remark
R118	1-249-419-11	CARBON	1.5K	5%	1/4W	
R119	1-249-417-11	CARBON	1K	5%	1/4W	
R120	1-249-417-11	CARBON	1K	5%	1/4W	
R121	1-249-421-11	CARBON	2.2K	5%	1/4W	
R122	1-249-429-11	CARBON	10K	5%	1/4W	
R123	1-249-417-11	CARBON	1K	5%	1/4W	
R124	1-249-417-11	CARBON	1K	5%	1/4W	
R125	1-249-429-11	CARBON	10K	5%	1/4W	
R126	1-249-430-11	CARBON	12K	5%	1/4W	
R127	1-249-425-11	CARBON	4.7K	5%	1/4W	
R128	1-249-431-11	CARBON	15K	5%	1/4W	
R129	1-249-417-11	CARBON	1K	5%	1/4W	
R132	1-249-421-11	CARBON	2.2K	5%	1/4W	
R133	1-249-413-11	CARBON	470	5%	1/4W	
R134	1-249-413-11	CARBON	470	5%	1/4W	
R135	1-249-417-11	CARBON	1K	5%	1/4W	
R136	1-249-417-11	CARBON	1K	5%	1/4W	
R137	1-249-417-11	CARBON	1K	5%	1/4W	
R138	1-249-425-11	CARBON	4.7K	5%	1/4W	
R139	1-249-417-11	CARBON	1K	5%	1/4W	
R141	1-249-421-11	CARBON	2.2K	5%	1/4W	
R145	1-249-429-11	CARBON	10K	5%	1/4W	
R146	1-249-417-11	CARBON	1K	5%	1/4W	
R147	1-249-418-11	CARBON	1.2K	5%	1/4W	
R148	1-249-427-11	CARBON	6.8K	5%	1/4W	
R149	1-249-417-11	CARBON	1K	5%	1/4W	
R150	1-249-417-11	CARBON	1K	5%	1/4W	
R151	1-249-415-11	CARBON	680	5%	1/4W	
R152	1-249-417-11	CARBON	1K	5%	1/4W	
R153	1-249-417-11	CARBON	1K	5%	1/4W	
R154	1-249-418-11	CARBON	1.2K	5%	1/4W	
R155	1-249-419-11	CARBON	1.5K	5%	1/4W	
R156	1-249-413-11	CARBON	470	5%	1/4W	
R157	1-249-415-11	CARBON	680	5%	1/4W	
R158	1-249-419-11	CARBON	1.5K	5%	1/4W	
R159	1-249-419-11	CARBON	1.5K	5%	1/4W	
R160	1-249-419-11	CARBON	1.5K	5%	1/4W	
R161	1-249-417-11	CARBON	1K	5%	1/4W	
R162	1-249-417-11	CARBON	1K	5%	1/4W	
R163	1-249-417-11	CARBON	1K	5%	1/4W	
R164	1-249-404-00	CARBON	82	5%	1/4W	
R165	1-249-405-11	CARBON	100	5%	1/4W	
R166	1-249-401-11	CARBON	47	5%	1/4W	
R167	1-249-425-11	CARBON	4.7K	5%	1/4W	
R168	1-249-413-11	CARBON	470	5%	1/4W	
R169	1-249-413-11	CARBON	470	5%	1/4W	
R170	1-249-429-11	CARBON	10K	5%	1/4W	
R171	1-249-418-11	CARBON	1.2K	5%	1/4W	
R172	1-249-417-11	CARBON	1K	5%	1/4W	
R173	1-249-429-11	CARBON	10K	5%	1/4W	
R174	1-249-425-11	CARBON	4.7K	5%	1/4W	
R176	1-249-417-11	CARBON	1K	5%	1/4W	
R177	1-249-417-11	CARBON	1K	5%	1/4W	

When indicating parts by reference number, please include the board name.

Ref.No	Part No.	Description				Remark
R178	1-249-405-11	CARBON	100	5%	1/4W	
R179	1-249-405-11	CARBON	100	5%	1/4W	
R180	1-215-394-00	CARBON	75	5%	1/4W	
R181	1-249-429-11	CARBON	10K	5%	1/4W	
R185	1-249-414-11	CARBON	560	5%	1/4W	
R186	1-249-417-11	CARBON	1K	5%	1/4W	
R187	1-249-417-11	CARBON	1K	5%	1/4W	
R188	1-249-418-11	CARBON	1.2K	5%	1/4W	
R189	1-249-417-11	CARBON	1K	5%	1/4W	
R190	1-249-413-11	CARBON	470	5%	1/4W	
R201	1-247-881-00	CARBON	120K	5%	1/4W	
R202	1-247-895-00	CARBON	470K	5%	1/4W	
R203	1-249-430-11	CARBON	12K	5%	1/4W	
R204	1-249-437-11	CARBON	47K	5%	1/4W	
R205	1-249-441-11	CARBON	100K	5%	1/4W	
R206	1-249-436-11	CARBON	39K	5%	1/4W	
R207	1-249-441-11	CARBON	100K	5%	1/4W	
R208	1-249-440-11	CARBON	82K	5%	1/4W	
R209	1-247-895-00	CARBON	470K	5%	1/4W	
R210	1-249-421-11	CARBON	2.2K	5%	1/4W	
R211	1-249-441-11	CARBON	100K	5%	1/4W	
R212	1-247-895-00	CARBON	470K	5%	1/4W	
R213	1-249-434-11	CARBON	27K	5%	1/4W	
R214	1-249-434-11	CARBON	27K	5%	1/4W	
R215	1-249-441-11	CARBON	100K	5%	1/4W	
R216	1-249-437-11	CARBON	47K	5%	1/4W	
R217	1-247-895-00	CARBON	470K	5%	1/4W	
R218	1-249-417-11	CARBON	1K	5%	1/4W	
R220	1-249-435-11	CARBON	33K	5%	1/4W	
R221	1-249-438-11	CARBON	56K	5%	1/4W	
R222	1-249-417-11	CARBON	1K	5%	1/4W	
R223	1-249-441-11	CARBON	100K	5%	1/4W	
R224	1-249-441-11	CARBON	100K	5%	1/4W	
R225	1-249-436-11	CARBON	39K	5%	1/4W	
R229	1-249-417-11	CARBON	1K	5%	1/4W	
R230	1-249-404-00	CARBON	82	5%	1/4W	
R232	1-249-417-11	CARBON	1K	5%	1/4W	
R233	1-249-425-11	CARBON	4.7K	5%	1/4W	
R234	1-249-431-11	CARBON	15K	5%	1/4W	
R240	1-215-473-00	METAL	150K	1%	1/6W	
R241	1-249-428-11	CARBON	8.2K	5%	1/4W	
R242	1-215-468-00	METAL	91K	1%	1/6W	
R243	1-249-405-11	CARBON	100	5%	1/4W	
R244	1-215-429-00	METAL	2.2K	1%	1/6W	
R245	1-249-431-11	CARBON	15K	5%	1/4W	
R246	1-247-891-00	CARBON	330K	5%	1/4W	
R401	1-215-493-00	CARBON	1M	5%	1/4W	
R402	1-249-438-11	CARBON	56K	5%	1/4W	
R403	1-249-441-11	CARBON	100K	5%	1/4W	
R404	1-215-493-00	CARBON	1M	5%	1/4W	
R405	1-249-412-11	CARBON	390	5%	1/4W	
R406	1-249-418-11	CARBON	1.2K	5%	1/4W	
R407	1-249-414-11	CARBON	560	5%	1/4W	
R408	1-249-417-11	CARBON	1K	5%	1/4W	
R409	1-249-424-11	CARBON	3.9K	5%	1/4W	
R410	1-249-421-11	CARBON	2.2K	5%	1/4W	
R411	1-249-418-11	CARBON	1.2K	5%	1/4W	
R412	1-249-434-11	CARBON	27K	5%	1/4W	
R417	1-249-438-11	CARBON	56K	5%	1/4W	
R418	1-215-445-00	METAL	10K	1%	1/6W	
R419	1-215-457-00	METAL	33K	1%	1/6W	
R420	1-249-433-11	CARBON	22K	5%	1/4W	
R421	1-249-433-11	CARBON	22K	5%	1/4W	
R422	1-249-430-11	CARBON	12K	5%	1/4W	
R423	1-249-422-11	CARBON	2.7K	5%	1/4W	
R450	1-249-409-11	CARBON	220	5%	1/4W	
R451	1-215-394-00	CARBON	75	5%	1/4W	
R452	1-249-417-11	CARBON	1K	5%	1/4W	
R453	1-249-417-11	CARBON	1K	5%	1/4W	
R454	1-249-422-11	CARBON	2.7K	5%	1/4W	
R455	1-249-422-11	CARBON	2.7K	5%	1/4W	

VARIABLE RESISTOR

RV001	1-228-991-00	RES, ADJ, CARBON 2.2K
RV002	1-228-990-00	RES, ADJ, CARBON 1K
RV003	1-228-991-00	RES, ADJ, CARBON 2.2K
RV004	1-228-990-00	RES, ADJ, CARBON 1K
RV011	1-228-996-00	RES, ADJ, CARBON 47K
RV012	1-228-996-00	RES, ADJ, CARBON 47K
RV101	1-228-993-00	RES, ADJ, CARBON 4.7K
RV102	1-228-990-00	RES, ADJ, CARBON 1K
RV103	1-228-989-00	RES, ADJ, CARBON 470
RV104	1-228-989-00	RES, ADJ, CARBON 470
RV401	1-228-995-00	RES, ADJ, METAL GLAZE 22K
RV402	1-228-995-00	RES, ADJ, METAL GLAZE 22K

SWITCH

SW401	1-560-914-00	POST, CONNECTOR 2P

CRYSTAL

X001	1-567-652-11	VIBRATOR, CRYSTAL
X401	1-567-344-21	VIBRATOR, CRYSTAL (VCO)

****

*1-618-835-11 RS-21 BOARD
****

CAPACITOR

C041	1-161-379-00	CERAMIC	0.01MF	30%	16V
C042	1-161-379-00	CERAMIC	0.01MF	30%	16V
C043	1-161-379-00	CERAMIC	0.01MF	30%	16V

CONNECTOR

CN41	1-563-228-11	CONNECTOR, D-SUB 25P

When indicating parts by reference number, please include the board name.

RS-21 KY-93 PD-31 DUS-128

Ref.No	Part No.	Description				Remark
		IC				
IC41	8-759-951-88	IC SN75188N				
IC42	8-759-951-89	IC SN75189AN				
IC43	8-759-240-24	IC TC4024BP				
		RESISTOR				
RO41	1-249-435-11	CARBON	33K	5%	1/4W	
		SWITCH				
SW041	1-570-598-11	SWITCH, DIP				

****

	*1-618-836-11	KY-93 BOARD **********				
	*3-694-850-02	CASE, SHIELD, FP-18				
	*3-694-997-01	BLIND, RAY CATCHER				
		CAPACITOR				
C1	1-124-224-00	ELECT	47MF	20%	6.3V	
C2	1-162-288-31	CERAMIC	330PF	10%	50V	
C3	1-124-224-00	ELECT	47MF	20%	6.3V	
C4	1-124-258-00	ELECT	3.3MF	20%	50V	
C5	1-123-611-00	ELECT	1MF	20%	50V	
C6	1-124-224-00	ELECT	47MF	20%	6.3V	
		CONNECTOR				
CN1	*1-564-035-11	PIN, CONNECTOR 10P				
CN2	*1-564-027-00	PIN, CONNECTOR 2P				
CN3	*1-564-027-00	PIN, CONNECTOR 2P				
		DIODE				
D1	8-719-821-13	DIODE TLR113A				
D2	8-719-821-13	DIODE TLR113A				
D3	8-719-906-57	DIODE GL-5NG24				
D4	8-719-801-30	DIODE TLY113A				
D5	8-719-821-13	DIODE TLR113A				
D6	8-719-821-13	DIODE TLR113A				
D7	8-719-821-13	DIODE TLR113A				
D8	8-719-821-13	DIODE TLR113A				
		IC				
IC1	8-759-182-43	IC UPD8243C(M)				
IC2	8-759-602-54	IC CX20106A				
		TRANSISTOR				
Q1	8-729-900-61	TRANSISTOR DTA114ES				
Q2	8-729-900-61	TRANSISTOR DTA114ES				
Q3	8-729-900-61	TRANSISTOR DTA114ES				
Q4	8-729-900-61	TRANSISTOR DTA114ES				

Ref.No	Part No.	Description				Remark
		RESISTOR				
R1	1-249-410-11	CARBON	270	5%	1/4W	
R2	1-249-410-11	CARBON	270	5%	1/4W	
R3	1-249-410-11	CARBON	270	5%	1/4W	
R4	1-249-410-11	CARBON	270	5%	1/4W	
R5	1-249-410-11	CARBON	270	5%	1/4W	
R6	1-249-410-11	CARBON	270	5%	1/4W	
R7	1-249-410-11	CARBON	270	5%	1/4W	
R8	1-249-410-11	CARBON	270	5%	1/4W	
R9	1-249-425-11	CARBON	4.7K	5%	1/4W	
R10	1-249-425-11	CARBON	4.7K	5%	1/4W	
R11	1-249-425-11	CARBON	4.7K	5%	1/4W	
R12	1-249-425-11	CARBON	4.7K	5%	1/4W	
R13	1-249-425-11	CARBON	4.7K	5%	1/4W	
R14	1-249-425-11	CARBON	4.7K	5%	1/4W	
R15	1-249-425-11	CARBON	4.7K	5%	1/4W	
R16	1-249-425-11	CARBON	4.7K	5%	1/4W	
R17	1-249-407-11	CARBON	150	5%	1/4W	
R18	1-215-476-00	METAL	200K	1%	1/6W	
R19	1-249-393-11	CARBON	10	5%	1/4W	
R20	1-249-421-11	CARBON	2.2K	5%	1/4W	
R21	1-249-405-11	CARBON	100	5%	1/4W	
R22	1-249-425-11	CARBON	4.7K	5%	1/4W	
R23	1-249-425-11	CARBON	4.7K	5%	1/4W	
R24	1-249-405-11	CARBON	100	5%	1/4W	
		SWITCH				
S1	1-554-174-00	SWITCH, KEY BOARD (FWD SCAN)				
S2	1-554-174-00	SWITCH, KEY BOARD (REV SCAN)				
S3	1-554-174-00	SWITCH, KEY BOARD (PLAY)				
S4	1-554-174-00	SWITCH, KEY BOARD (PAUSE)				
S5	1-554-174-00	SWITCH, KEY BOARD (AUDIO)				
S6	1-554-377-51	SWITCH, SLIDE (AUTO REPEAT)				

****

	*1-618-837-11	PD-31 BOARD **********				
		DIODE				
D11	8-719-110-32	DIODE PH302B				

****

	*1-618-839-11	DUS-128 BOARD **********				
		CONNECTOR				
CN11	*1-562-884-11	CONNECTOR, F.P.C 4P				

****

When indicating parts by reference number, please include the board name.

DUS-129 DUS-130 SW-127 SW-138 DUS-127 HP-25 SM-3

Ref.No	Part No.	Description				Remark
	*1-618-840-11	DUS-129 BOARD				
		**********				
		DIODE				
D21	8-719-920-74	EE-SF5-B				
D22	8-719-920-74	EE-SF5-B				
		RESISTOR				
R31	1-249-408-11	CARBON	180	5%	1/4W	
R32	1-249-408-11	CARBON	180	5%	1/4W	
**********						
	*1-618-841-11	DUS-130 BOARD				
		**********				
		DIODE				
D31	8-719-918-74	DIODE GP-1S04				
		RESISTOR				
R41	1-249-415-11	CARBON	680	5%	1/4W	
**********						
	*1-618-830-11	SW-127 BOARD				
		**********				
		CONNECTOR				
CN1	*1-562-884-11	CONNECTOR, F.P.C 4P				
		SWITCH				
S1	1-554-174-00	SWITCH, KEY BOARD (OPEN/CLOSE)				
**********						
	*1-618-844-11	SW-138 BOARD				
		**********				
		SWITCH				
S11	1-554-241-00	SWITCH, LEVER				
**********						
	*1-618-838-11	DUS-127 BOARD				
		**********				
		CAPACITOR				
C11	1-101-006-00	CERAMIC	0.047MF		50V	
**********						

Ref.No	Part No.	Description				Remark
	*1-618-843-11	HP-25 BOARD				
		**********				
		CAPACITOR				
C51	1-126-103-11	ELECT	470MF	20%	16V	
C52	1-126-103-11	ELECT	470MF	20%	16V	
		IC				
IC11	8-759-745-60	IC NJM4560D				
		JACK				
JC1	1-507-659-00	JACK, LAREG TYPE				
		IC LINK				
PS051⚠	1-532-727-11	LINK, IC				
PS052⚠	1-532-727-11	LINK, IC				
		RESISTOR				
R51	1-249-395-11	CARBON	15	5%	1/4W	
R52	1-249-395-11	CARBON	15	5%	1/4W	
R53	1-249-430-11	CARBON	12K	5%	1/4W	
R54	1-249-430-11	CARBON	12K	5%	1/4W	
R55	1-249-435-11	CARBON	33K	5%	1/4W	
R56	1-249-435-11	CARBON	33K	5%	1/4W	
R57	1-246-457-00	CARBON	220	5%	1/4W	
R58	1-246-457-00	CARBON	220	5%	1/4W	
		VARIABLE RESISTOR				
RV1	1-237-199-21	RES, VAR, CARBON 50K/50K				
**********						
	*1-626-679-11	SM-3 BOARD				
		**********				
		CONNECTOR				
CN021	*1-564-030-00	PIN, CONNECTOR 5P				
		FILTER				
FL021	1-235-056-00	FILTER, LINE				
FL022	1-235-056-00	FILTER, LINE				
**********						

When indicating parts by reference number, please include the board name.

The components identified by mark ⚠ are critical for safety.
Replace only with part number specified.

Les composants identifiés par une marque ⚠ sont critiques pour la sécurité.
Ne les remplacer que par une pièce portant le numéro spécifié.

Ref.No	Part No.	Description	Remark
		MISCELLANEOUS	
		**********	
	1-228-139-21	RES, VAR, CARBON 10K	
	⚠.1-509-898-00	RECEPTACLE	
	⚠.1-509-910-00	HOUSING, CONNECTOR (2P)	
	1-558-057-11	WIRE, FLEXIBLE CARD 4P	
	1-558-058-11	WIRE, FLEXIBLE CARD 20P	
	8-848-053-01	PICKUP, OPTICS KSS-141B	
J901	1-507-195-21	SPECIAL REMOTE CONTROL JACK	
M901	1-541-503-11	MOTOR, DC (MNR-8400A) (SLIDER)	
M902	X-3694-872-1	MOTOR ASSY (LOADING)	
M903	8-835-171-01	MOTOR, DC BHF-3401A (SPINDLE)	
S901	⚠.1-553-318-00	SWITCH, PUSH (AC POWER) (1 KEY)	
T2	⚠.1-448-443-11	TRANSFORMER, POWER	

****

ACCESSORIES AND PACKING MATERIALS
****

Part No.	Description	Remark
⚠.1-556-760-11	CORD, POWER (3 CORE)	
*3-694-922-01	SHEET, PROTECTION	
*3-694-950-01	CUSHION (UPPER)	
*3-694-951-01	CUSHION (LOWER)	
*3-694-973-11	INDIVIDUAL CARTON	
⚠.3-769-820-11	MANUAL, INSTRUCTION	

****

The components identified by mark ⚠ are critical for safety.
Replace only with part number specified.

Les composants identifiés par une marque ⚠ sont critiques pour la sécurité.
Ne les remplacer que par une pièce portant le numéro spécifié.

When indicating parts by reference number, please include the board name.

SECTION 7
MECHANICAL ADJUSTMENT

PERIODIC CHECKS AND MAINTENACE

For full display of the functions and performance of the set and for the longest service life of the machine, execution of the following maintenance and periodic checks is recommended.

- **PERIODIC CHECK ITEMS**

  Carry out periodic checks on the items in separated paragraphs according to the lenght of time used.

- **MAINTENANCE AFTER PERIODIC CHECKS OR REPAIRING OF THE SET**

  Execute cleaning of the following positions after periodic checks or set-repairing irrespective of the length of the time of use.

  (1) Object Lens/Skew Lens
  Remove video disc and blow off the dust on the object lens and SKEW lens with the blower-brush or sweep them with soft cloth.

  (2) Disc Tray Section
  Remove video disc and sweep the tray of the disc with soft cloth.

  (3) Sweeping Clean the Disc Surface
  When there seems dust on the disc, sweep the disc surface with soft cloth, no alcohol or no other chemicals should be used.

- **MAINTENANCE TIME FOR KEY PARTS (SAMPLE)**

	5,000H	10,000H
OPTICAL BLOCK	–	♦
SPINDLE MOTOR	♦	♦
SLIDE MOTOR	♦	♦
LOADING MOTOR	◊	◊

♦ : replace ◊ : check

Fixture Required
Reference Disc (F1): J-6160-570-A

7-1. PHOTO INTERRUPTOR POSITION ADJUSTMENT

1. Insert the reference disc.
2. Turn on the POWER switch and press the OPEN/CLOSE button and then perform loading.
3. After the chucking, turn off the POWER switch.
4. Adjust the position of DUS-130 board in the direction shown by the arrow in Fig. 7-1 so that the space A meets 1 to 1.5 mm.
5. Tighten the fixing screw.
6. Perform loading with the reference disc, and confirm that there is no worse.

Note: When the disc is not chucking normally, the centering guide on the spindle motor may not be operated. Following check is required.

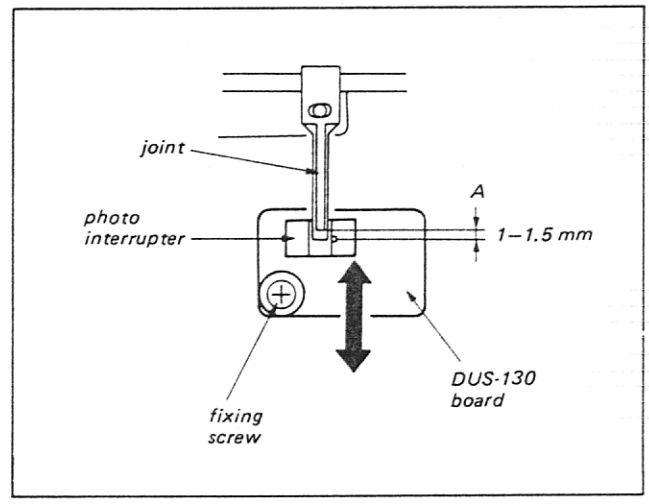

Fig. 7-1

When pressing the centering guide with the finger, confirm that the centering guide is lowered smoothly. If centering guide is not lowered smoothly, lubricate the shaft (A) portion in Fig. 7-2 with an extremely small amount of grease.

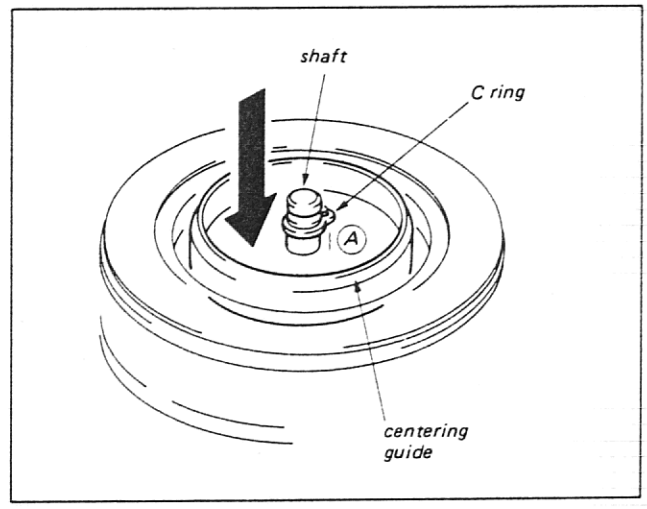

Fig. 7-2

7-2. CHUCK ASS'Y PRESSING ADJUSTMENT

1. Insert the reference disc.
2. Turn on the POWER switch and press the OPEN/CLOSE button and then perform loading.
3. After the chucking, turn off the POWER switch.
4. Adjust the adjustment hole as shown in Fig. 7-3 so that the hole of the C arm ass'y and the space (A) of the link (3) meets 0.6 to 1.5 mm.
5. Tighten the fixing screws.

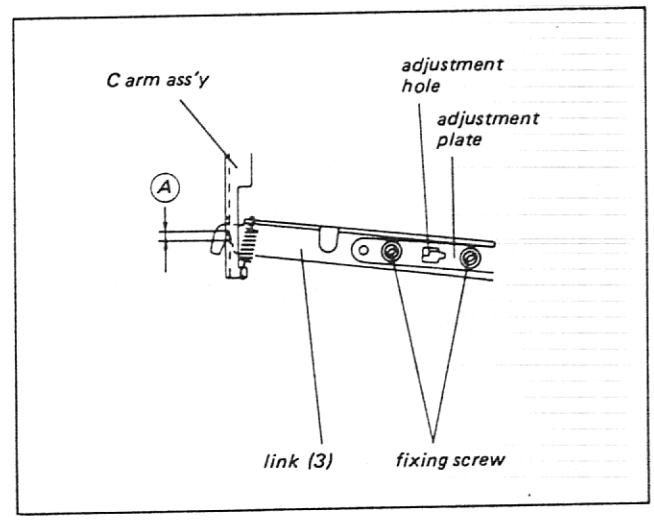

Fig. 7-3

7-3. LOADING SWITCH POSITION ADJUSTMENT

1. Put the 0.3 mm spacer between the S plate and the S retainer as shown in Fig. 7-4.
2. Adjust the position of the switch so that the switch is turned on status.
3. Tighten the fixing screw and apply the screw lock.

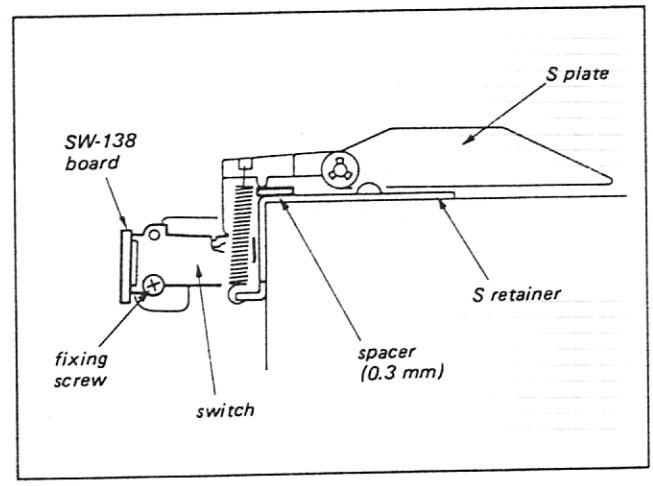

Fig. 7-4

7-4. POSITION GEAR FIXING ADJUSTMENT

1. Turn the variable resistor in the direction shown by the arrow fully.
2. Attach the position gear to the shaft so that the slit in the shaft matches the projection on the gear as shown in Fig. 7-5.

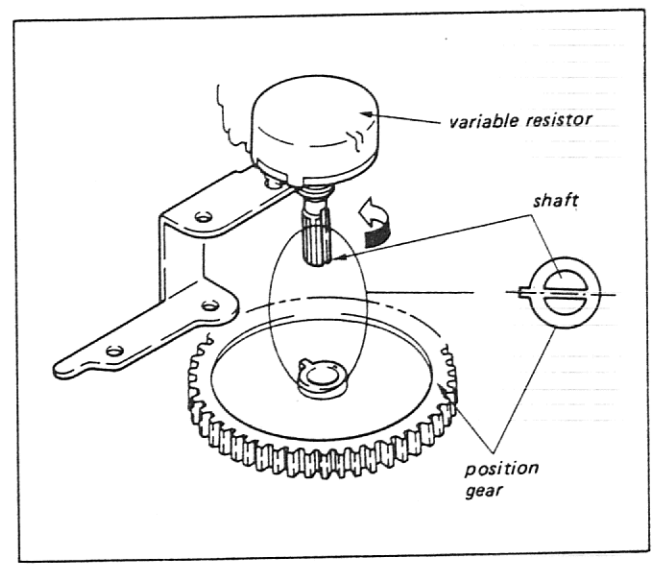

Fig. 7-5

7-5. POSITION GEAR PHASE ADJUSTMENT

After replacing the optical block ass'y, the sled block ass'y (slide gear block, PM lever block), this adjustment is required.

1. Remove the fixing screw.
2. Push the slide gear block in the hole (A) to the direction shown by the arrow (B).
3. Move the optical block ass'y to the direction shown by the arrow (C).
4. Adjust the position of the gear in the direction shown by the arrow (D) so that the projection of the gear fits in the hole of the mark.
5. Tighten the fixing screw.

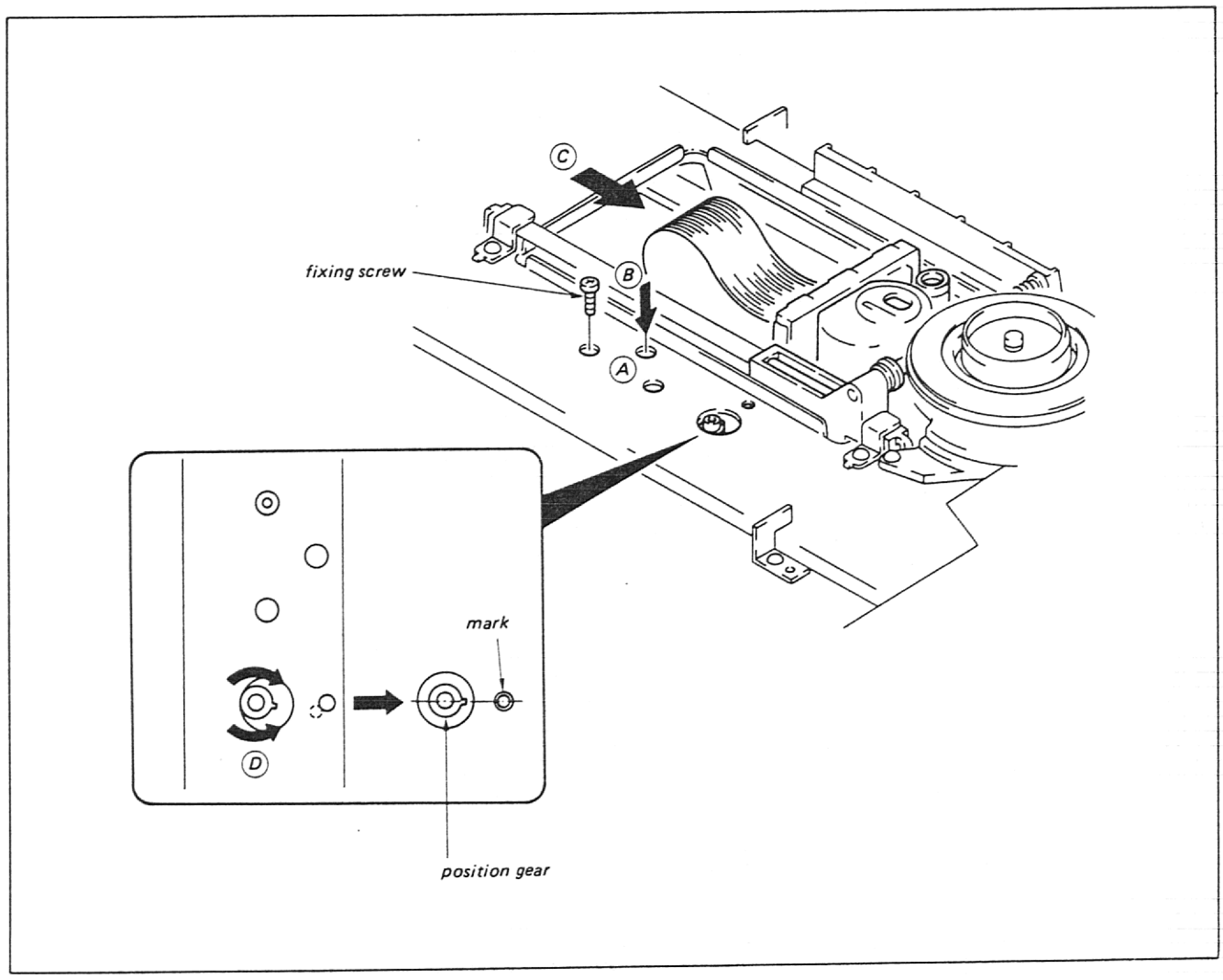

Fig. 7-6

SECTION 8
ELECTRICAL ADJUSTMENT

Equipment Required

DC Voltmeter
Frequency Counter
Oscilloscope Dual Trace
Remote Control Unit, RM-2001
Signal Generator (Sweep Generator) ~ 5.5 MHz
Vectorscope
Audio Level Meter
Wow-flutter Meter
Picture Monitor

Fixture Required

Reference Disc (J1) ; J-6160-700-A
Servo Checker ; J-6166-370-A
Connecting Cable ; J-6166-380-A
Adjustment Driver ; J-6080-909-A
(for SKEW adjustment)

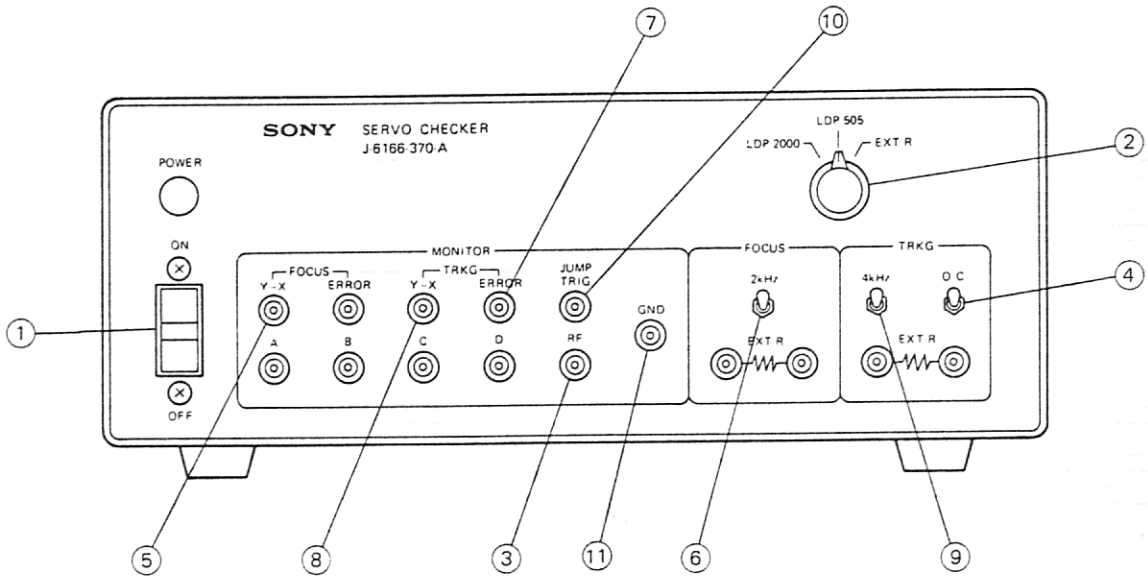

1. POWER switch
2. MODE SELECTOR
3. RF terminal
4. TRKG O/C̄ switch
5. FOCUS Y-X terminal
6. FOCUS 2 kHz switch
7. TRKG ERROR terminal
8. TRKG Y-X terminal
9. TRKG 4 kHz switch
10. JUMP TRIG terminal
11. GND

8-1. MISCELLANEOUS ADJUSTMENT

8-1-1. DC Power Regulator Adjustment

Conditions	Specifications	Adjustment
• POWER on state	TP6/PS-113 +5.0 ±0.05 V dc	RV1/PS-113

8-1-2. Spindle PWM Ref 2H Adjustment

Conditions	Specificatlions	Adjustment
• POWER on state	Q101-Ⓒ/SV-29 31,250 ±10 Hz	RV101/SV-29

8-1-3. Decoder Clock Adjustment

Conditions	Specifications	Adjustment
• Connect SS-87 board TP12 and GND (Remove the connection between SS-87 board TP12 and GND after completing adjustment.) • POWER on state	TP1/SS-87 3.0 ±0.03 MHz	CV1/SS-87

8-2. FOCUS SERVO ADJUSTMENT

Remove the blind lid on the rear panel, and connect the SERVO CHECKER to CN8/PR-80 board.

Rear Panel

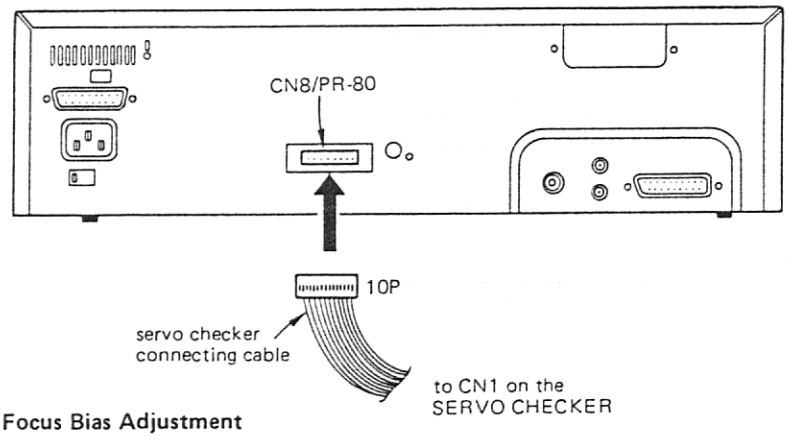

8-2-1. Focus Bias Adjustment

Conditions	Specifications	Adjustment
• Search for frame 35,000 of a REF. disc. • Set the switches on the SERVO CHECKER as follows. POWER ; ON MODE SELECTOR ; LDP-505 FOCUS 2kHz ; OFF TRKG 4kHz ; OFF TRKG O/C̄ ; OFF	RF terminal on the SERVO CHECKER Maximize the amplitude.	RV4/PR-80

8-2-2. Focus Gain Adjustment

Conditions	Specifications	Adjustment
• Search for frame 35,000 of a REF. disc. • Set the switches on the SERVO CHECKER as follows. POWER ; ON MODE SELECTOR ; LDP-505 FOCUS 2kHz ; ON TRKG 4kHz ; OFF TRKG O/C̄ ; OFF	Focus Y-X terminal on the SERVO CHECKER 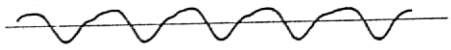 0 ±0.4 V dc	RV5/PR-80

8-3. TRACKING SERVO ADJUSTMENT

Remove the blind lid on the rear panel, and connect the SERVO CHECKER to CN8/PR-80 board.

8-3-1. Tracking Bias Adjustment

Conditions	Specifications	Adjustment
• Search for frame 35,000 of a REF. disc. • Set the switches on the SERVO CHECKER as follows. POWER ; ON MODE SELECTOR ; LDP-505 FOCUS 2kHz ; OFF TRKG 4kHz ; OFF TRKG O/C̄ ; ON	TRKG ERROR terminal on the SERVO CHECKER 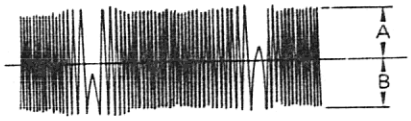 0 V dc A = B	RV6/PR-80

8-3-2. Tracking Gain Adjustment

Conditions	Specifications	Adjustment
• Search for frame 35,000 of a REF. disc. • Set the switches on the SERVO CHECKER as follows. POWER ; ON MODE SELECTOR ; LDP-505 FOCUS 2kHz ; OFF TRKG 4kHz ; ON TRKG O/C̄ ; OFF	TRKG Y-X terminal on the SERVO CHECKER 0 ±0.2 V dc	RV7/PR-80

8-3-3. Track Jump Adjustment

Conditions	Specifications	Adjustment
• Search for frame 35,000 of a REF. disc. (STILL mode) • Playing back a REF. disc at a FWD x3 speed mode.	TRKG ERROR terminal on the SERVO CHECKER (STILL) 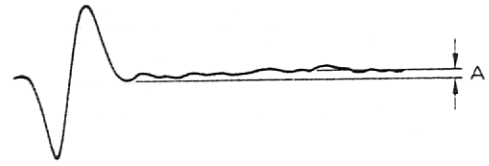 (FWD x3) 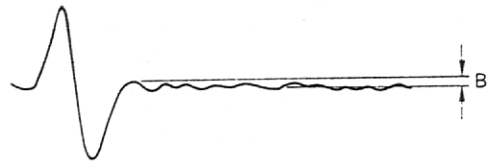 A = B	RV1/SV-29
• Search for frame 35,000 of a REF. disc. (STILL mode)	TRKG ERROR terminal on the SERVO CHECKER 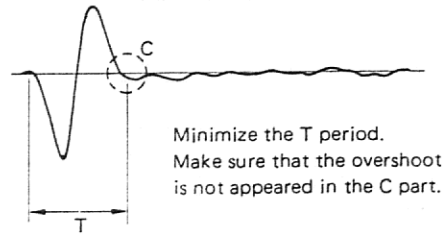 Minimize the T period. Make sure that the overshoot is not appeared in the C part.	RV2/SV-29

8-3-4. Multi Track Jump Adjustment

Conditions	Specifications	Adjustment
• Playing back a REF. disc. • Short TP1 to E1 on the KY-93 board. • Some key on the Remote Control Unit (RM2001, RM2001A, RM1002) work as following. CH1 ; Fwd. Multi Track Jump CH2 ; Rev. Multi Track Jump STOP ; Repeat Multi Track Jump SKIP ; Repeat Multi Track Jump		• Display INDEX by INDEX key. • Search 1000 Frame. • Set FWD 200 Track Jump ([CH1], [2], [0], [0], [ENTER]) Repeat FWD 200 Track Jump by STOP or SKIP key. • Confirm displayed picture No. is incremented by 200.
• POWER on state	D3-anode/SV-32 +0.65 ±0.01 V	RV1/SV-32

Conditions	Specifications	Adjustment
• Playing back a REF. disc.	TP1/SV-32 EXT TRIG: TP2/SV-32 (Trigger slope: –)	RV1/SV-32
1. Carry out FWD 10 Track Jump.	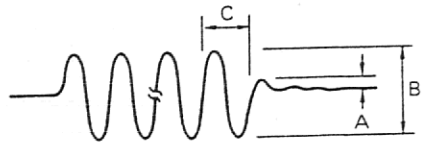 Confirm that $B \leqq \frac{A}{2}$. Repeat FWD 10 Track Jump sereral times. If $B > \frac{A}{2}$, adjust RV1 so that C=25 msec. If convergence of portion B is C>25, perform this adjustment after "Tracking gain adjustment".	
2. Carry out REV 10 Track Jump.	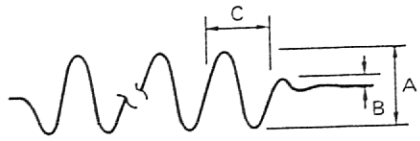 Confirm in the same way as step 1.	
3. Carry out FWD 200 Track Jump.	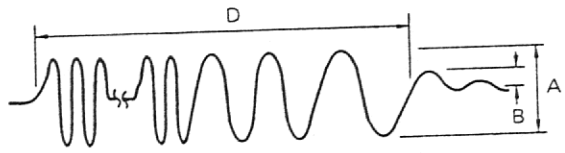 Confirm in the same way as step 1. When D>14 msec, adjust RV1 so that the width of the portion D shorten (12–13 msec) and confirm in the same way as step 1.	
4. Carry out REV 200 Track Jump.	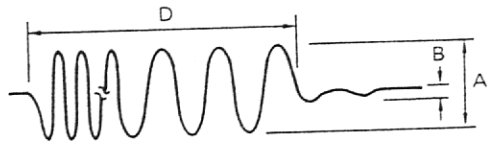 Confirm in the same way as step 3.	

8-4. IN/OUT LIMIT POSITION ADJUSTMENT

8-4-1. IN Limit Adjustment

Conditions	Adjustment
• Playing back a REF. disc. • Short TP1 to E1 on the KY-93 board. • Press the S2 (◀◀ REV) button and the S3 (▶ PLAY) button on the KY-93 board simultaneously.	Adjust RV3 on the PR-80 board so that the blinking D5 (CLV) lamp is extinguished. Be careful not to turn the RV3 excessively.
• Press the S2 button and the S4 (❚❚ PAUSE) button simultaneously at above conditions.	When the D5 lamp is blinked, make sure that the monitor picture displays following time. 00 : 59 : 40 : 00 to 00 : 59 : 49 : 24

8-4-2. 12 inch Disc Out Limit Adjustment

Conditions	Adjustment
• Playing back a REF. disc. • Short TP1 to E1 on the KY-93 board. • Turn the S6 (AUTO REPEAT) switch off. • Press the S1 (▶▶ FWD) button and the S3 (▶ PLAY) button on the KY-93 board simultaneously.	Adjust RV1 on the PR-80 board so that the blinking D5 (CLV) lamp is extinguished. Be careful not to turn the RV1 excessively.
• Press the S1 button and the S4 (❚❚ PAUSE) button simultaneously at above conditions.	When the D5 lamp is blinked, make sure that the monitor picture displays following time. 1 : 36 : 10 : 00 to 1 : 36 : 19 : 24

8-4-3. 8 inch Disc Out Limit Adjustment

Conditions	Adjustment
• Playing back a REF. disc. • Short TP1 to E1 on the KY-93 board. • Turn the S6 (AUTO REPEAT) switch on. • Press the S1 (▶▶ FWD) button and the S3 (▶ PLAY) button on the KY-93 board simultaneously.	Adjust RV2 on the PR-80 board so that the blinking D5 (CLV) lamp is extinguished. Be careful not to turn the RV2 excessively.
• Press the S1 button and the S4 (❚❚ PAUSE) button simultaneously at above conditions.	When the D5 lamp is blinked, make sure that the monitor picture displayes following frame number. 24850 to 25099

8-5. VIDEO SYSTEM ADJUSTMENT

8-5-1. Demodulator Video Level Adjustment

Conditions	Specifications	Adjustment
• Search for chapter 15 of a REF. disc.	TP102/PR-80 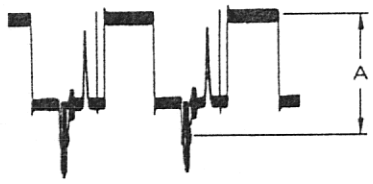 A = 2.0 ±0.1 V	RV101/PR-80

8-5-2. Dropout Sensitivity Adjustment

Conditions	Specifications	Adjustment
• Turn the POWER on without a disc. • Disconnect the FN1 on the PR-80 board (refer to 2-4). • Connect the 5.5 MHz and/or 5.0 MHz 300 mVp-p signal to the TP101 on the PR-80 board.	Frequency / TP105/PR-80 5.5 MHz / 0 V dc (Low level) 5.0 MHz / 5 V dc (High level)	RV102/PR-80

8-5-3. DOC Video Level Adjustment

Conditions	Specifications	Adjustment
• Search for chapter 15 of a REF. disc.	TP1/VP-10 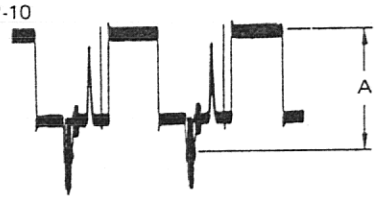 TP2/VP-10 A = B	RV1/VP-10

8-5-4. CCD Bias Adjustment

Conditions	Specifications	Adjustment
• Turn the POWER on without a disc. • Disconnect the CN2 on the VP-18 board.	Q21-(E)/VP-10 2.0 ±0.1 V dc	RV2/VP-10

8-5-5. Video Out Level Adjustment

Conditions	Specifications	Adjustment
• Search for chapter 15 of a REF. disc.	VIDEO OUT connector (VIDEO OUT connector should be terminated by 75 Ω.) 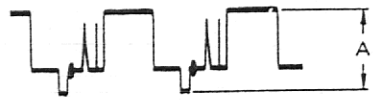 A = 1.0 ±0.02 V	RV3/VP-10

8-5-6. TBC Centering Adjustment

Conditions	Specifications	Adjustment
• Search for chapter 16 of a REF. disc. • Short TP202 to TP203 on the VP-10 board.	TP1/VP-10 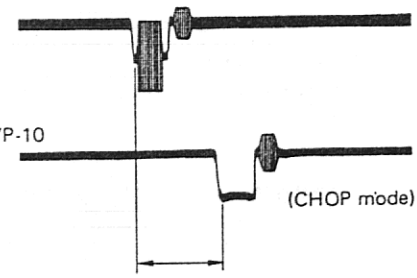 TP4/VP-10 (CHOP mode) 11 ±0.5 μs	RV4/VP-10

8-5-7. TBC 1/2H Rejecter Adjustment

Conditions	Specifications	Adjustment
• Playing back a REF. disc.	TP204/VP-10 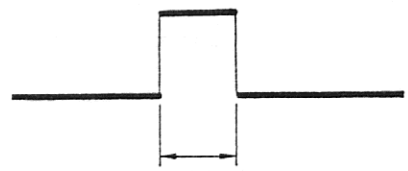 4 ±0.1 μs	RV12/VP-10

8-5-8. CF U/V Separator Adjustment

Conditions	Specifications	Adjustment
• Search for chapter 22 of a REF. disc. (STILL mode) • Connect a vectorscope to the VIDEO OUT connector.	VIDEO OUT connector (VIDEO OUT connector should be terminated by 75 Ω.) 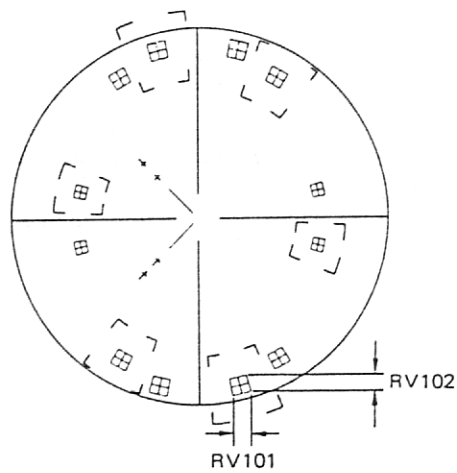 Minimize the each bright spot's spread.	RV101/VP-10 RV102/VP-10

8-5-9. CF Video Level Adjustment

Conditions	Specifications	Adjustment
• Search for chapter 15 of a REF. disc. (STILL mode)	VIDEO OUT connector (VIDEO OUT connector should be terminated by 75 Ω.) A = 1.0 ±0.02 V	RV103/VP-10

8-5-10. CF Chroma Level Adjustment

Conditions	Specifications	Adjustment
• Playing back the chapter 15 of a REF. disc at a FWD normal speed mode and/or STILL mode.	VIDEO OUT connector (VIDEO OUT connector should be terminated by 75 Ω.) NORMAL FWD 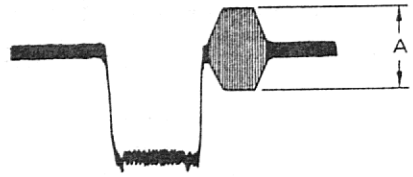 STILL 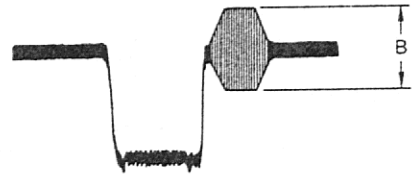 A = B	RV104/VP-10

8-5-11. B.B SC Adjustment

Conditions	Specifications	Adjustment
• POWER on state	TP401/VP-10 4,433,619 ±5 Hz	CV401/VP-10

8-5-12. B.B H Sync Adjustment

Conditions	Specifications	Adjustment
• POWER on state	IC410 pin (14)/VP-10 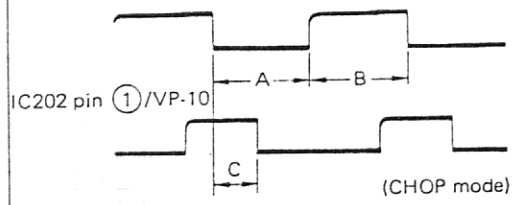 A = B C = 14 ±2 μs	Duty Adjustment RV402/VP-10 Phase Adjustment RV401/VP-10

8-5-13. Skew Servo Adjustment

Conditions	Adjustment
• Search for frame 17.264 of a REF. disc. (STILL mode)	Remove the blind lid on the rear panel, and adjust a skew VR on the optical block ass'y so that the left and right sides crosstalk is not appeared on the monitor picture. 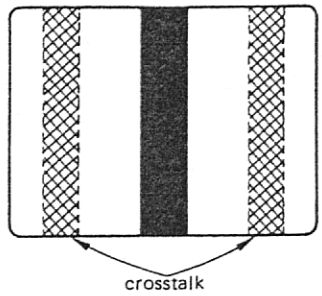 Rear Panel 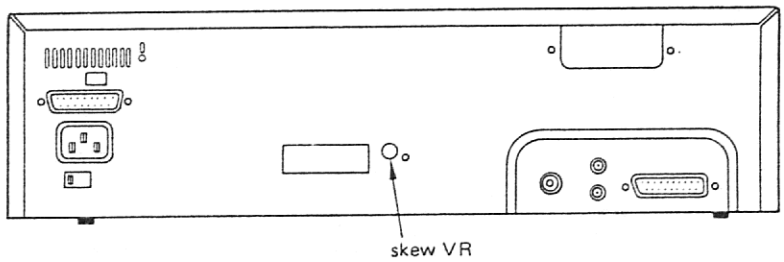

8-6. AUDIO SYSTEM ADJUSTMENT

8-6-1. TBC Centering Adjustment

Conditions	Specifications	Adjustment
• Turn the POWER on without a disc.	TP3/AU-73 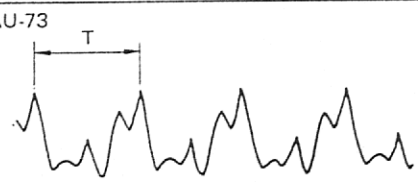 T = 90 ±5 ns	RV1/AU-73

8-6-2. TBC Gain Adjustment

Conditions	Specifications	Adjustment
• Playing back the chapter 1 of a REF. disc. • Connect a wow-flutter meter to the LINE OUT jack.	LINE OUT jack (CH-1/L or CH-2/R) Minimize the reading of a wow-flutter meter.	RV2/AU-73

8-6-3. LINE OUT Level Adjustment

Conditions	Specifications	Adjustment
• Playing back the chapter 1 of a REF. disc at a FWD normal speed mode. • Connect a audio level meter to the LINE OUT jack.	LINE OUT jack (CH-1/L) 2.2 ±0.5 dBs	RV4/AU-73
	LINE OUT jack (CH-2/R) 2.2 ±0.5 dBs Note: LINE OUT connectors should be terminated by 47 kΩ.	RV3/AU-73

8-7. PARTS ARRANGEMENT DIAGRAM FOR ADJUSTMENTS

RP-80 BOARD (Component Side)

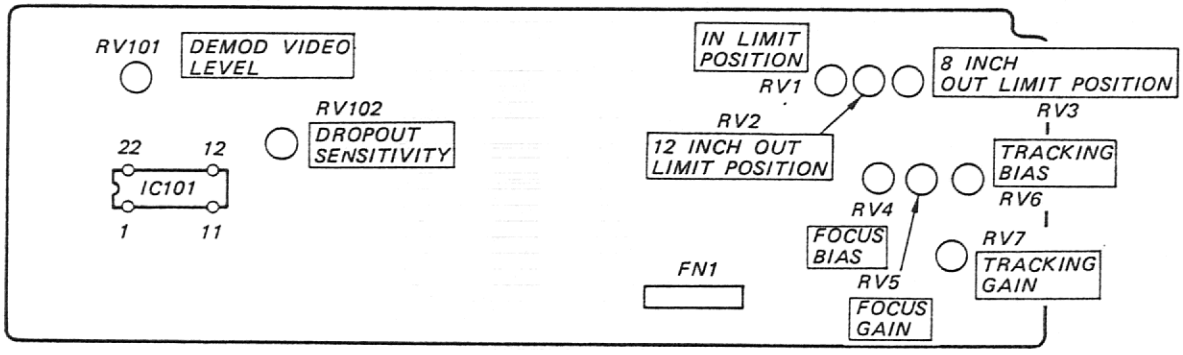

VP-10 BOARD (Component Side)

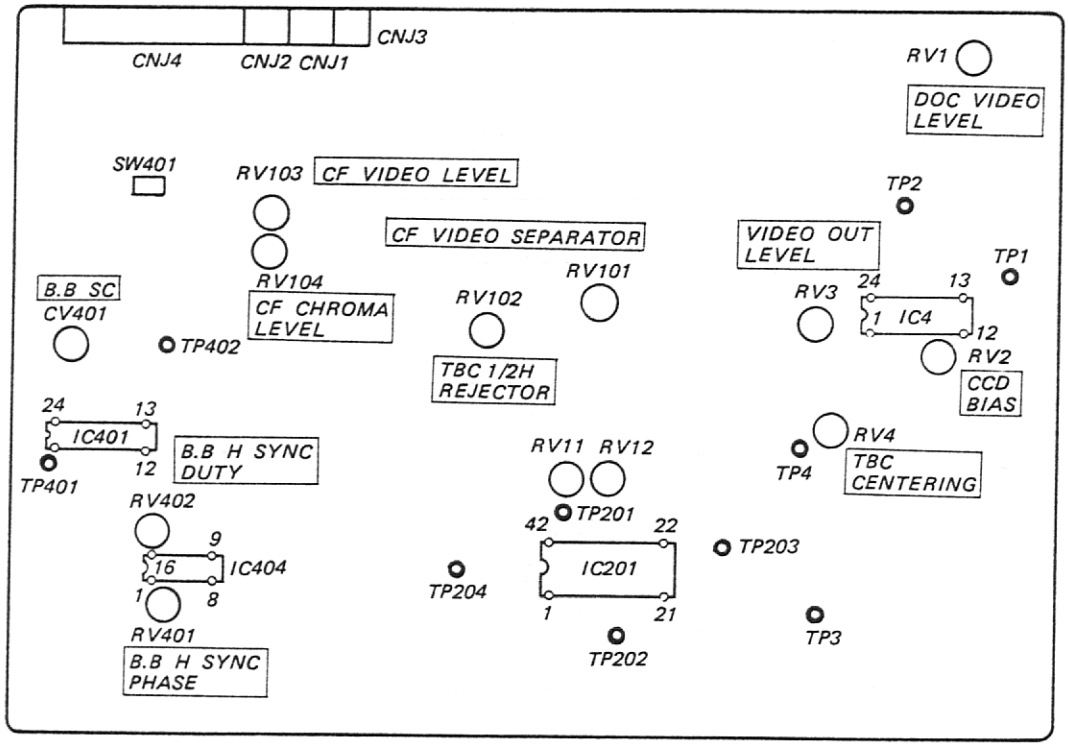

AU-73 BOARD (Conductor Side)

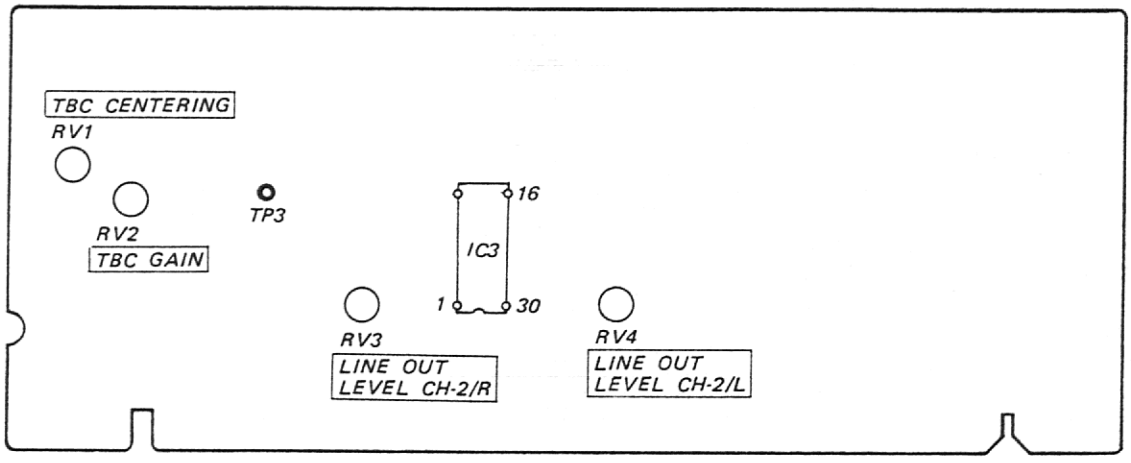

SS-87 BOARD (Conductor Side)

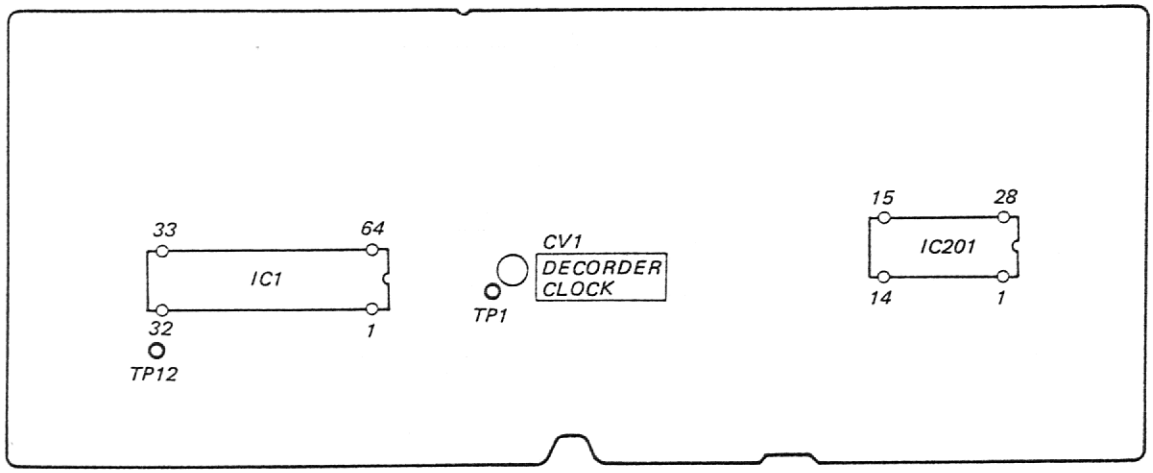

SV-29 BOARD (Conductor Side)

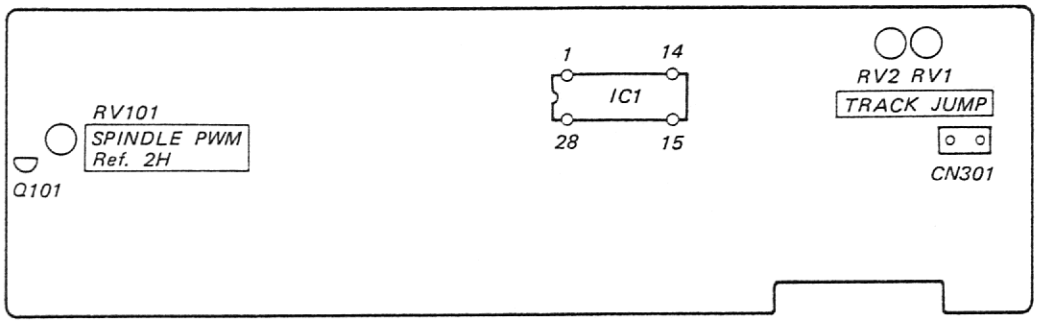

KY-93 BOARD
(Component Side)

SV-32 BOARD (Conductor Side)

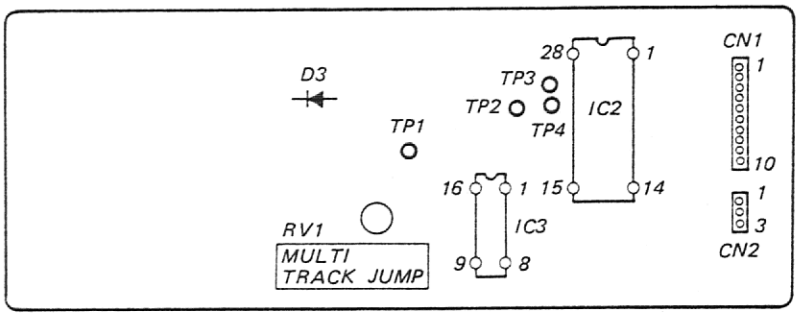

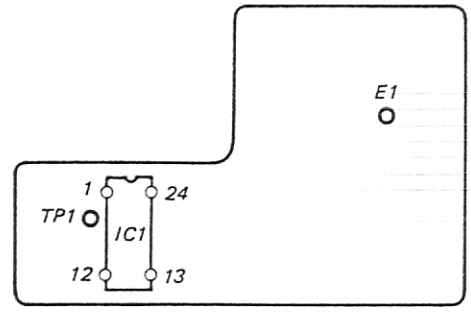

PS-113 BOARD (Component Side)

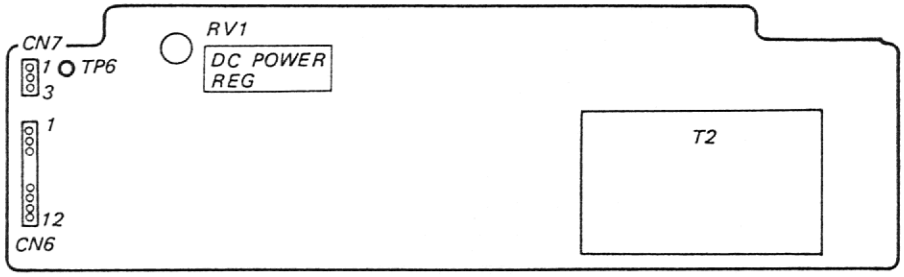

LDP-1550P

9-972-635-01

Sony Corporation
Consumer Video Group

English
88C0509-1
Printed in Japan
© 1988. 3
Published by A/V Engineering Service Dept.