Pioneer

Service Manual

ORDER NO.
RRV2091

CD CDV LD PLAYER

CLD-S320F

- **Refer to the service manual RRV1342 for CLD-S310F/WEZW/FR.**

THIS MANUAL IS APPLICABLE TO THE FOLLOWING MODEL(S) AND TYPE(S).

Type	Model	Power Requirement	Remarks
	CLD-S320F		
WYXQ/FR	◯	AC220-240V	

CONTENTS

1. CONTRAST OF MISCELLANEOUS PARTS ····· 2
2. SCHEMATIC DIAGRAM ····· 7
3. PCB CONNECTION DIAGRAM ····· 13

PIONEER ELECTRONIC CORPORATION 4-1, Meguro 1-Chome, Meguro-ku, Tokyo 153-8654, Japan
PIONEER ELECTRONICS SERVICE, INC. P.O. Box 1760, Long Beach, CA 90801-1760, U.S.A.
PIONEER ELECTRONIC (EUROPE) N.V. Haven 1087, Keetberglaan 1, 9120 Melsele, Belgium
PIONEER ELECTRONICS ASIACENTRE PTE. LTD. 253 Alexandra Road, #04-01, Singapore 159936

©PIONEER ELECTRONIC CORPORATION 1999

T – IZE JAN. 1999 Printed in Japan

1. CONTRAST OF MISCELLANEOUS PARTS

NOTES: ●*Parts marked by "NSP" are generally unavailable because they are not in our Master Spare Parts List.*
●*The ⚠ mark found on some component parts indicates the importance of the safety factor of the part. Therefore, when replacing, be sure to use parts of identical designation.*
●*Reference Nos. indicate the pages and Nos. in the service manual for the base model.*
●*When ordering resistors, first convert resistance values into code form as shown in the following examples.*

Ex.1 When there are 2 effective digits (any digit apart from 0), such as 560 ohm and 47k ohm (tolerance is shown by J=5%, and K=10%).

560 Ω → 56×10^1 → 561 ..... RD1/4PU [5][6][1] J
47k Ω → 47×10^3 → 473 ..... RD1/4PU [4][7][3] J
0.5 Ω → R50 ..... RN2H [R][5][0] K
1 Ω → 1R0 ..... RS1P [1][R][0] K

Ex.2 When there are 3 effective digits (such as in high precision metal film resistors).

5.62k Ω → 562×10^1 → 5621 ..... RN1/4PC [5][6][2][1] F

■ CONTRAST TABLE

CLD-S320F/WYXQ/FR and CLD-S310F/WEZW/FR are constructed the same except for the following :

Mark	Ref. No.	Symbol and Description	Part No. CLD-S310F /WEZW/FR	Part No. CLD-S320F /WYXQ/FR	Remarks
		2.1 PACKING			
NSP	P4-1	Caution (EW)	VRM1027	Not used	
	P4-4	Operating Instructions (French)	VRC1041	VRC1070	
	P4-5	Protector	VHB1007	Not used	
NSP	P4-8	Dry Cell Battery (R6P, AA)	VEM-013	VEM1010	
	P4-9	Remote Control Unit	VXX2268	Not used	
	P4-9	Remote Control Unit (CU-CLD155)	Not used	VXX2614	
	P4-12	Protector B	VHB1012	Not used	
	P4-13	Mirror Mat Sheet	Z23-007	DHL1006	
NSP	P4-14	Warranty Card	ARY7008	ARY7022	
	P4-15	Packing Case	VHG1450	VHG1752	
NSP		Cord Bag	Not used	VEG-012	for AC Power Cord
		Pad L	Not used	VHA1193	*1 No. 1
		Pad R	Not used	VHA1194	*1 No. 2
		2.2 EXTERIOR AND DISC TRAY SECTION			
	P6-1	Bonnet S	VXX2117	VXX2351	
	P6-7	CD Tray	VNK2687	VNK3007	
NSP	P6-10	LD Tray	VNK2686	VNK3188	
	P6-12	Door Spring	VBH1247	VBH1248	
	P6-13	Door Holder	VNL1658	VNL1697	
	P6-15	Door Shaft	VLL1455	Not used	
NSP	P6-15	Door Shaft	Not used	VLL1466	*2
	P6-16	CD Door	VNK2791	Not used	
NSP	P6-16	CD Door	Not used	VNK3316	*2
	P6-17	Damper Assy	VXA1999	Not used	
	P6-18	Tray Panel	VNK2801	VNK3315	
	P6-19	Disc Pad	VEC1682 (×12)	VEC1682 (×14)	
	P6-20	Tray Assy-S	VXX2171	Not used	
NSP	P6-22	Caution Label (F)	VRW-328	Not used	
		CD Door Assy	Not used	VXA2237	*2
		2.3 TOP VIEW SECTION			
NSP	P9-15	Panel Holder	VNA1710	VNA1840	

Mark	Ref. No.	Symbol and Description	Part No. CLD-S310F /WEZW/FR	Part No. CLD-S320F /WYXQ/FR	Remarks
		2.4 FRONT PANEL SECTION			
NSP	P8-1	Front Panel	VNK3195	Not used	
	P8-1	Front Panel	Not used	VNK4305	*1 No. 1
	P8-2	Pioneer Badge	PAM1608	PAM1776	*1 No. 2
	P8-3	FL Lens	VEC1791	VEC2002	*1 No. 3
	P8-4	Key A	VNK2793	Not used	
	P8-6	PW Button	VNK2329	Not used	
	P8-7	L Key	VNK2812	Not used	
	P8-8	Main Key	VNK3181	Not used	
	P8-10	FLKY Assy	VWG1657	VWG1965	*1 No. 4
NSP	P8-11	KEYB Assy	VWG1627	Not used	
		Key K	Not used	VNK2998	*1 No. 5
		LD Key	Not used	VNK4087	*1 No. 6
		CD Key	Not used	VNK4088	*1 No. 7
		10 Key	Not used	VNK4201	*1 No. 8
		Lens Holder	Not used	VNK4266	*1 No. 9
		Play Key	Not used	VNK4306	*1 No. 10
		Skip Key	Not used	VNK4307	*1 No. 11
		Stop Key	Not used	VNK4308	*1 No. 12
NSP		KALB Assy	Not used	VWG1964	*1 No. 13
		2.5 BOTTOM VIEW SECTION			
	P10-1	MOTHER Assy	VWS1198	VWS1372	
⚠	P10-3	SYPS Assy	VWR1234	VWR1275	
⚠	P10-4	AC Power Cord	VDG1061	ADG1154	
⚠	P10-5	Cord Stopper	CM-22B	Not used	
	P10-7	Rear Panel R	VNA1598	VNA1977	
	P10-12	Insulator	PNW1912 (×4)	PNW1912 (×2)	*1 No. 1 (for Front)
NSP	P10-14	Base Chassis	VNA1461	VNA1564	
NSP	P10-15	Rear Panel L	VNA1580	Not used	
	P10-15	Rear Panel L	Not used	VNA1976	
NSP	P10-20	SCRB Assy	VWV1432	VWV1656	
		Insulator Assy	Not used	VXA2295 (×2)	*1 No. 2 (for Rear)
		Power Joint	Not used	VNK4302	*1 No. 3

*1 : The numbers in the remarks column correspond to the numbers on the "EXPLODED VIEWS".

*2 :

	CD Door Assy	VXA2237
NSP	├ Door Shaft	VLL1466
NSP	└ CD Door	VNK3316

■ EXPLODED VIEWS

Note : The numbers on the exploded views correspond to the numbers on the "CONTRAST TABLE".

● Packing

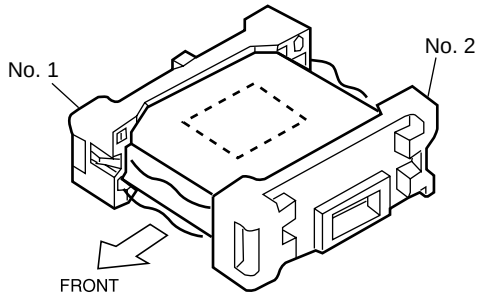

● Bottom View Section

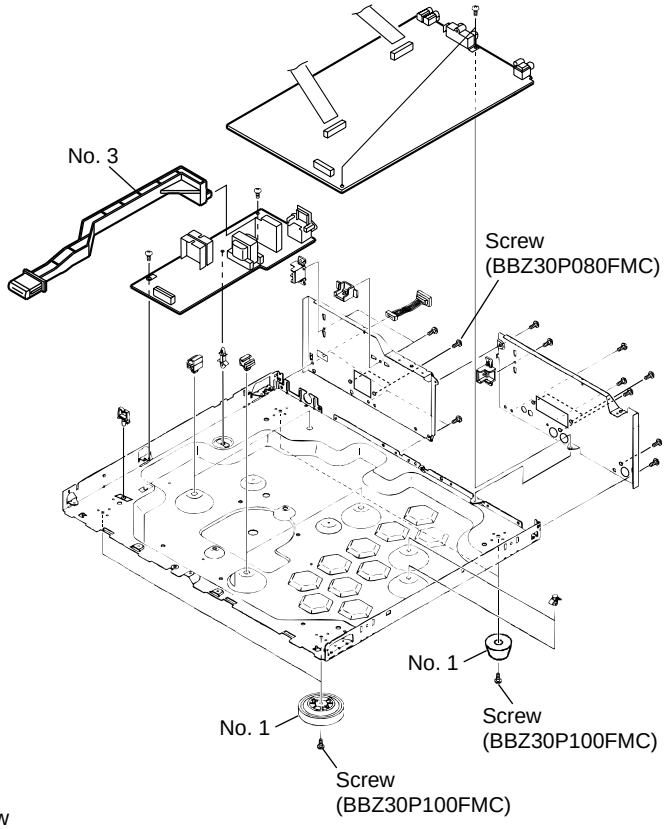

● Front Panel Section

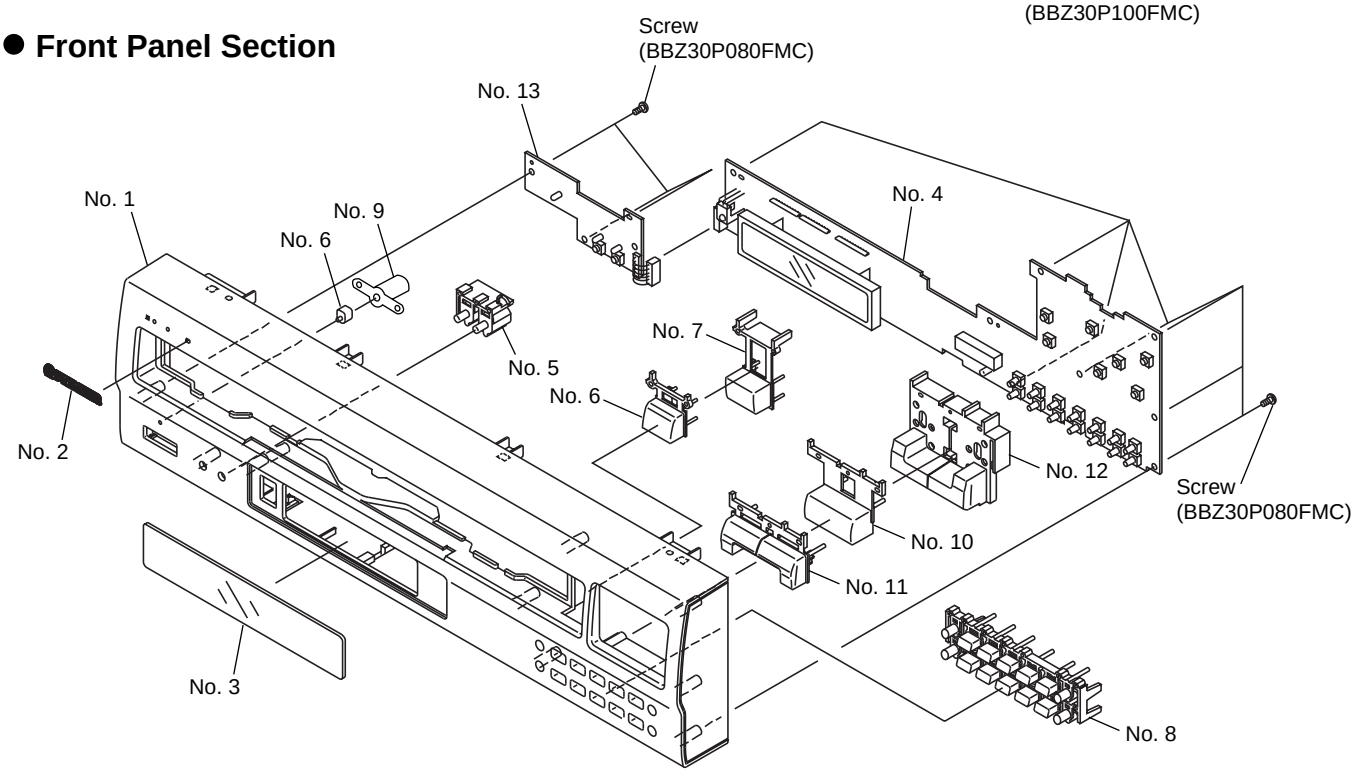

■ PCB PARTS LIST

LIST OF WHOLE PCB ASSEMBLIES

Mark	Symbol and Description	Part No. CLD-S310F /WEZW/FR	Part No. CLD-S320F /WYXQ/FR	Remarks
NSP	MACB ASSY	VWM1507	VWM1507	
NSP	├─ LMSB ASSY	VWG1554	VWG1554	
NSP	├─ PKSB ASSY	VWG1555	VWG1555	
NSP	└─ FG ASSY	VWG1556	VWG1556	
NSP	FLKB ASSY	VWM1592	Not used	
NSP	├─ KEYB ASSY	VWG1627	Not used	
	└─ FLKY ASSY	VWG1657	Not used	
NSP	FLKB ASSY	Not used	VWM1844	
NSP	├─KALB ASSY	Not used	VWG1964	
	└─FLKY ASSY	Not used	VWG1965	
	MOTHER ASSY	VWM1601	VWM1899	
	├─MOTHER ASSY	VWS1198	VWS1372	
NSP	└─SCRB ASSY	VWV1432	VWV1656	
⚠	SYPS ASSY	VWR1234	VWR1275	

G MOTHER ASSY

VWS1372 and VWS1198 are constructed the same except for the following :

Mark	Symbol and Description	Part No. VWS1198	Part No. VWS1372	Remarks
	IC400	PAC005B	LA7133	
	IC801	PAC002A	LA9425	
	IC901	PAC003A	LA9420M	
	Q103,Q161,Q207,Q901,Q910	UN2212	DTC124EK	
	Q209,Q514,Q515	UN2112	DTA124EK	
	Q152	2SC3802K	2SC3082K	
	C444,C917	CEAS100M50	CEAT100M50	
	C424,C543,C565	CEAS101M10	CEAT101M10	
	C300	Not used	CEAT102M6R3	Refer to page 12.
	C904	CEAS1R0M50	CEAT1R0M50	
	C274,C275,C465,C922,C967,C968,C987	CEAS220M25	CEAT220M25	
	C519,C532,C576,C974,C975	CEAS221M10	CEAT221M10	
	C845,C902,C926	CEAS2R2M50	CEAT2R2M50	
	C101,C207,C225,C226,C270,C271,C422,C450,C458	CEAS470M10	CEAT470M10	
	C508,C516,C527,C530,C542,C547,C549,C553,C555	CEAS470M10	CEAT470M10	
	C558,C562,C564,C569,C801,C803,C833,C842,C844	CEAS470M10	CEAT470M10	
	C893,C927,C933	CEAS470M10	CEAT470M10	
	C210,C216	CEAS471M10	CEAT471M10	
	C850,C870	CEAS4R7M50	CEAT4R7M50	
	R106	RS1/10S104J	RS1/10S103J	
	R220,R222 (4.7Ω, 1/6W)	DCN1001	RFA1/6PU4R7J	
	VR450 (2.2kΩ)	RCP1019	VCP1123	
	VR603 (4.7kΩ)	RCP1020	VCP1154	
	VR604,VR607,VR612 (47kΩ)	RCP1047	VCP1160	

H SCRB ASSY

VWV1656 is the same as that of VWV1432.

Mark	No.	Description	Part No.

A PKSB ASSY

SWITCHES

	S104,S105		DSG1017

B FG ASSY

SEMICONDUCTOR

	D101		GP1S24

C LMSB ASSY

SWITCHES

	S101-S103		DSG1017

OTHERS

	CN101	10P FFC CONNECTOR	52044-1045

D SYPS ASSY

SEMICONDUCTORS

⚠	IC201		HA17431P
⚠	IC210		ICP-N15
⚠	IC211		ICP-N20
	IC202		UPC358C
	Q207,Q208,Q214		2SA933S
	Q205,Q206,Q210		2SC1740S
⚠	Q102,Q103		2SC3377
⚠	Q213		2SD2395
	Q203,Q204		T7F4S
	Q201,Q202		T7F4T
⚠	Q209		VZF1040
⚠	Q101		VZF1041
⚠	D104		1SS270A
	D209-D212,D216		AG01Z-VO
⚠	D101		D2SB60F4004
⚠	D102		EG01C
⚠	D103		MTZJ2.7B
	D218		MTZJ8.2B
⚠	D200		PS2561L1-1VM
⚠	D106		RD18FB2
	D207		RD33FB2
⚠	D206		VZF1039
⚠	D202,D203		VZF1042
⚠	D204		VZF1043

RESISTORS

⚠	R257	(68Ω, 1/4W)	VCN1048
⚠	R258	(10Ω, 1/4W)	VCN1051
⚠	R256	(0.22Ω, 1/4W)	VCN1055

OTHERS

⚠	F101	FUSE (T1.6A/H250V)	REK1033
⚠	F205	FUSE (2A)	VEK1033
⚠	F201,F202	FUSE	VEK1034
⚠	F203,F204	FUSE (1.0A/125V)	VEK1036

Mark	No.	Description	Part No.

E FLKY ASSY

SEMICONDUCTORS

	IC101		PD3389A
	IC102		S-806D
	Q102		DTA144ES
	Q101		DTC114ES
	D101		1SS254

SWITCHES

	S113-S119		ASG1034
	S101-S112,S120,S121		RSG1034

CAPACITORS

	C105,C109		CEAL100M16
	C101,C103		CEAL470M6R3
	C111-C113		CKPUYB101K50
	C110		CKPUYB102K50
	C108		CKPUYF223Z25
	C102,C104,C106		CKPUYY103N16

RESISTORS

	All Resistors		RD1/4PU□□□J

OTHERS

	CN102	6P CONNECTOR	06R-FJ
	CN101	FFC CONNECTOR 16P	52492-1620
	X101	CERAMIC RESONATOR (8.00MHz)	EFOEC8004A4
		REMOTE RECEIVER UNIT	GP1U28X
	V101	FL TUBE	VAW1045
		SPACER	VEC1599
		FL HOLDER	VNF1085

F KALB ASSY

SEMICONDUCTOR

	D303		SLR-342VCT31

SWITCHES

	S301,S302		ASG1034

RESISTORS

	All Resistors		RD1/4PU□□□J

OTHERS

	CN301	FJ CONNECTOR 6P	06P-FJ

2. SCHEMATIC DIAGRAM

Note : When ordering service parts, be sure to refer to "EXPLODED VIEWS and PARTS LIST" or "PCB PARTS LIST".

2.1 OVERALL CONNECTIONS, PKSB, FG and LMSB ASSEMBLIES

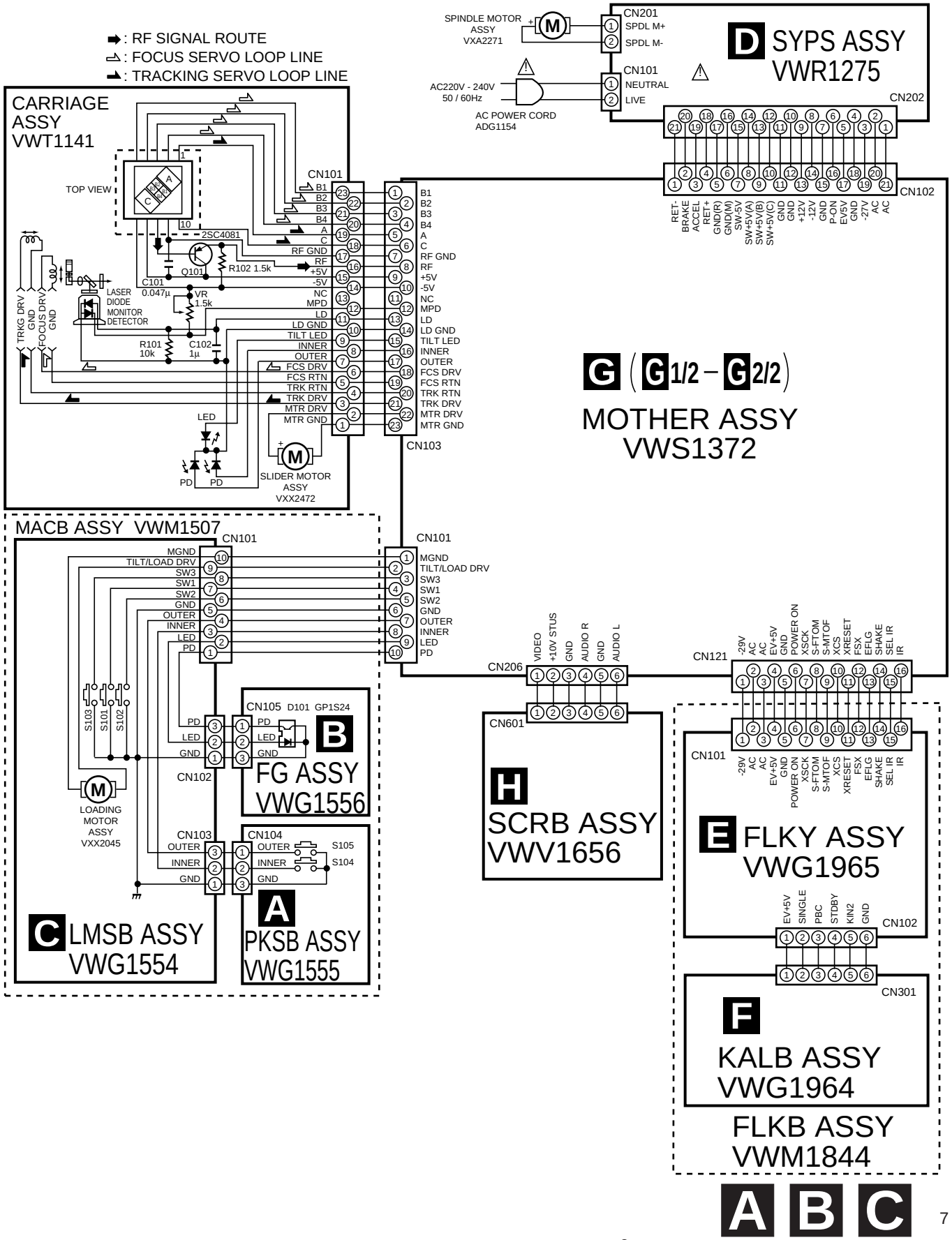

2.2 SYPS ASSY

《 NOTE OF SPARE PARTS IN POWER SUPPLY (SYPS) ASSY 》

- In case of repairing, use the described parts only to prevent an accident.
- Please write the red √ mark on the board when the primary section of POWER SUPPLY (SYPS) Assy is repaired.
- Please take care to keep the space, not touching other parts when replacing the parts.

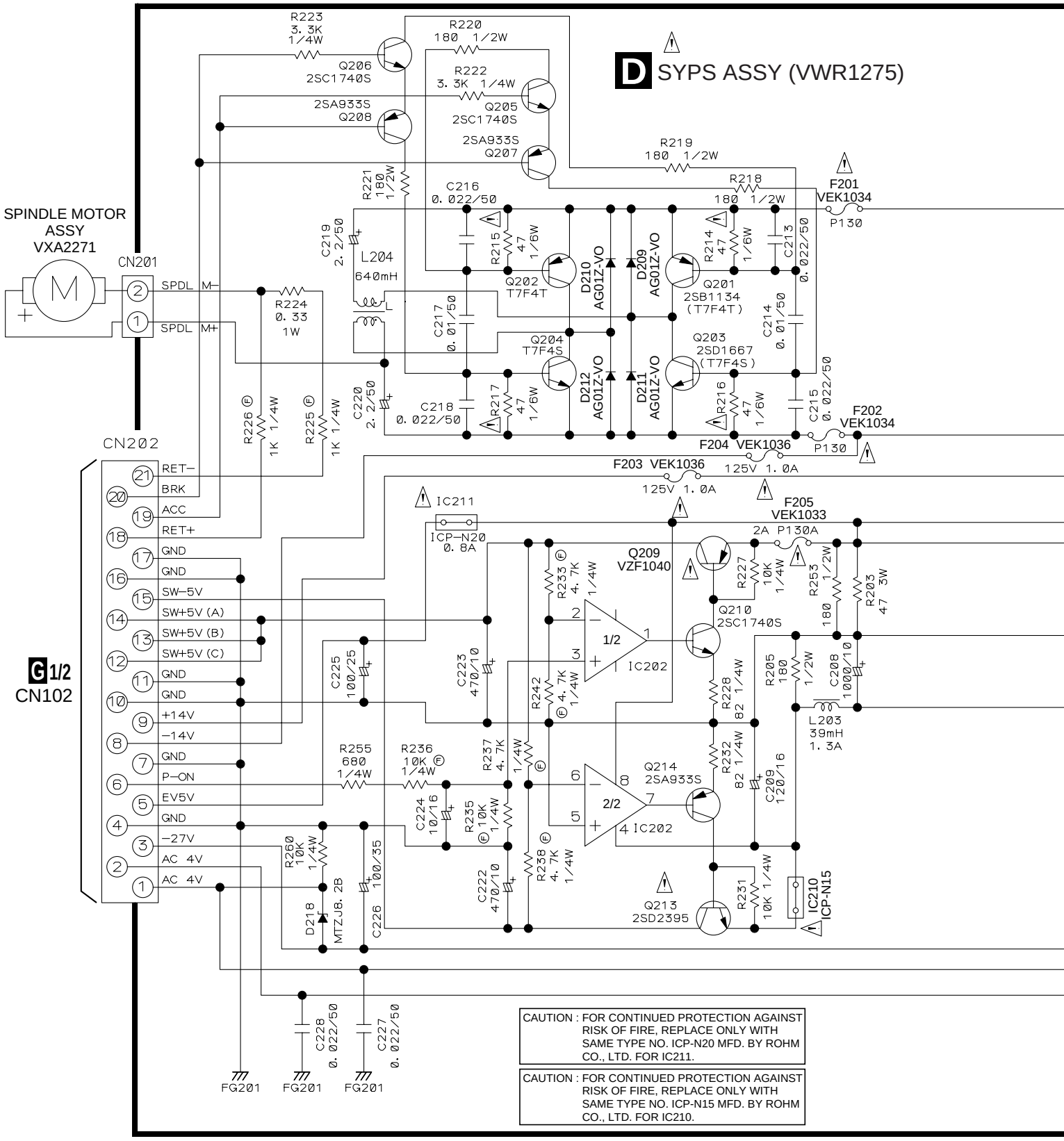

• NOTE FOR FUSE REPLACEMENT

CAUTION - FOR CONTINUED PROTECTION AGAINST RISK OF FIRE. REPLACE WITH SAME TYPE AND RATINGS ONLY.

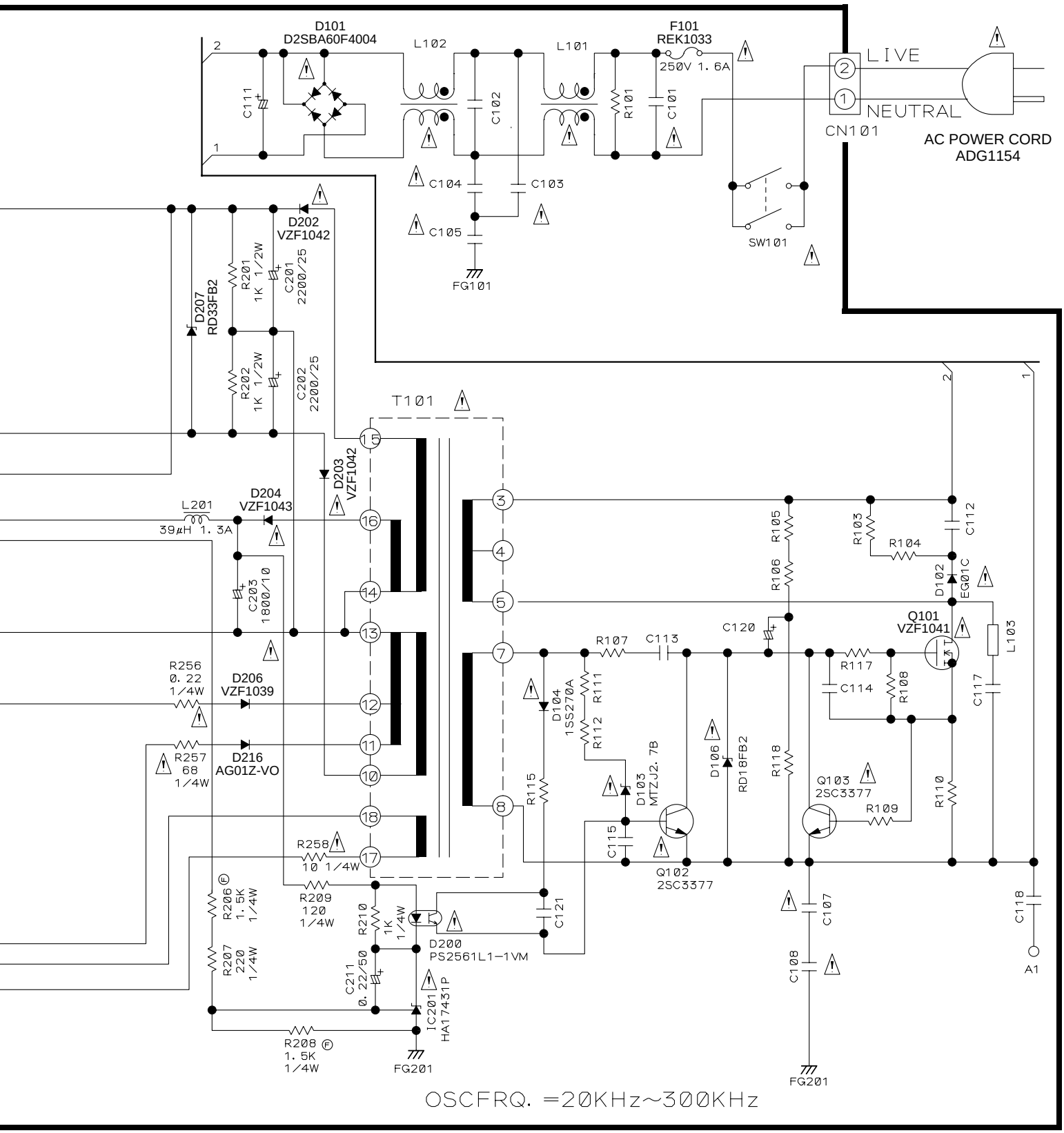

2.3 FLKY and KALB ASSEMBLIES

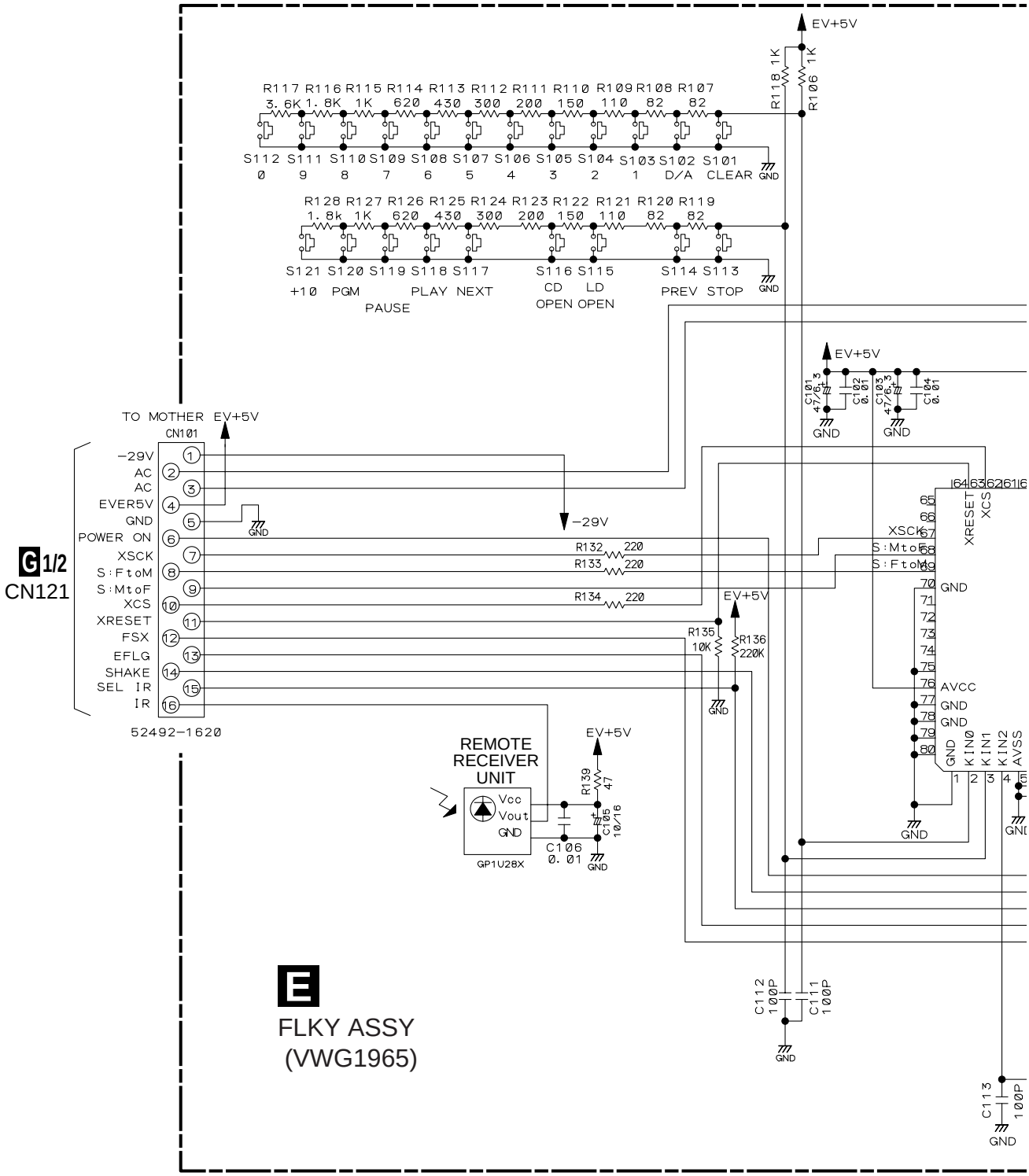

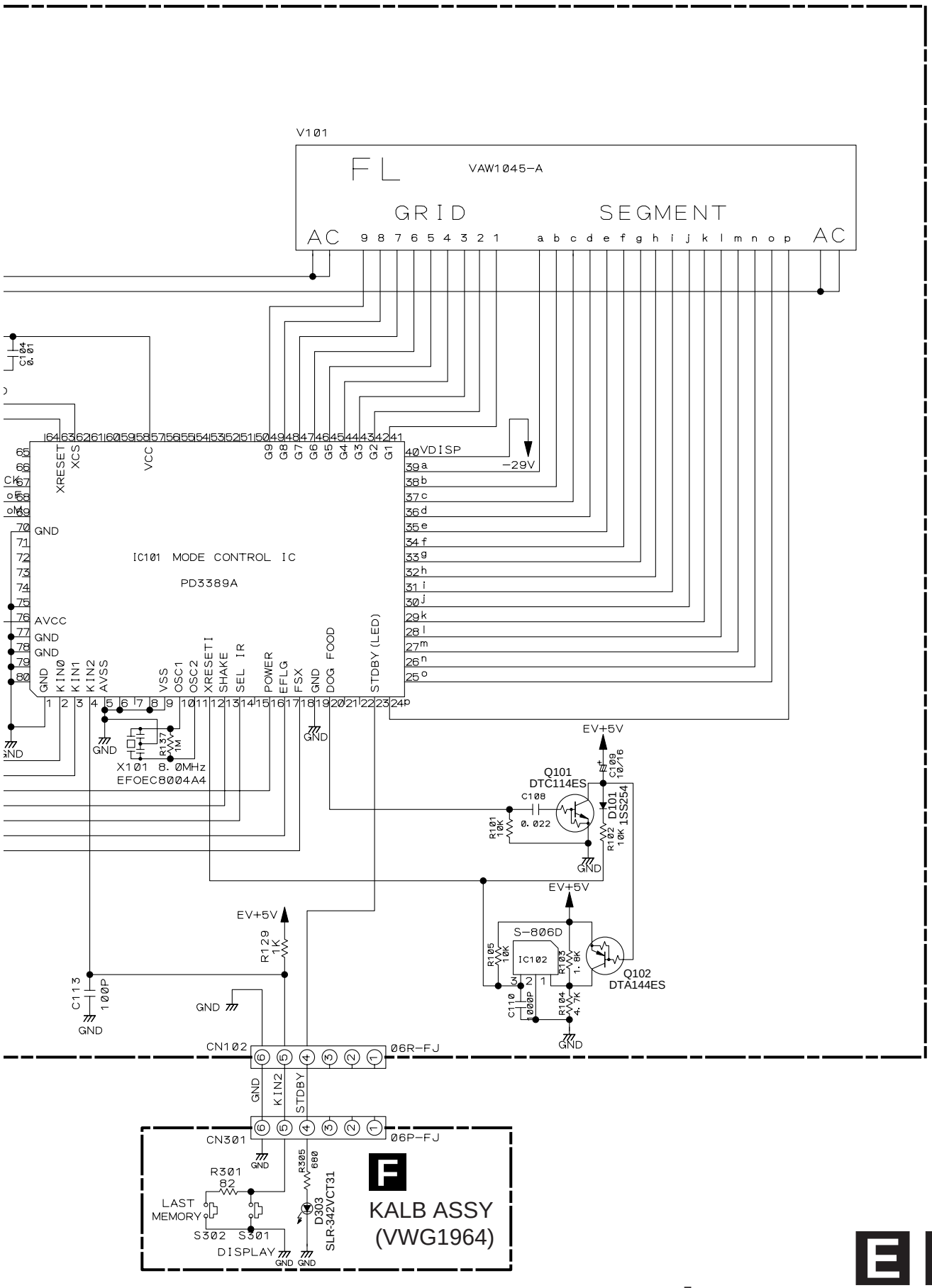
V101
FL
VAW1045-A
GRID
SEGMENT
AC
9 8 7 6 5 4 3 2 1
a b c d e f g h i j k l m n o p
AC
C104
0.01
IC101 MODE CONTROL IC
PD3389A
XRESET
XCS
VCC
VDISP
-29V
GND
AVCC
KIN0
KIN1
KIN2
AVSS
VSS
OSC1
OSC2
XRESETI
SHAKE
SEL IR
POWER
EFLG
FSX
DOG FOOD
STDBY (LED)
R137
1M
X101 8.0MHz
EFOEC8004A4
EV+5V
Q101
DTC114ES
C108
0.022
R101
10K
C109
10/16
D101
1SS254
R102
10K
R129
1K
C113
100P
S-806D
IC102
R105
10K
R103
1.8K
Q102
DTA144ES
C110
1000P
R104
4.7K
CN102
06R-FJ
CN301
06P-FJ
R301
82
LAST
MEMORY
S302
S301
DISPLAY
R305
680
D303
SLR-342VCT31
KALB ASSY
(VWG1964)

2.4 MOTHER ASSY

Schematic diagram of MOTHER Assy (VWS1372) shows only the part which is added to against the, MOTHER Assy (VWS1198).
The mark of the schematic diagram was changed as follows.

Base manual	This manual
SCH-2	G 1/2 H
SCH-3	G 2/2

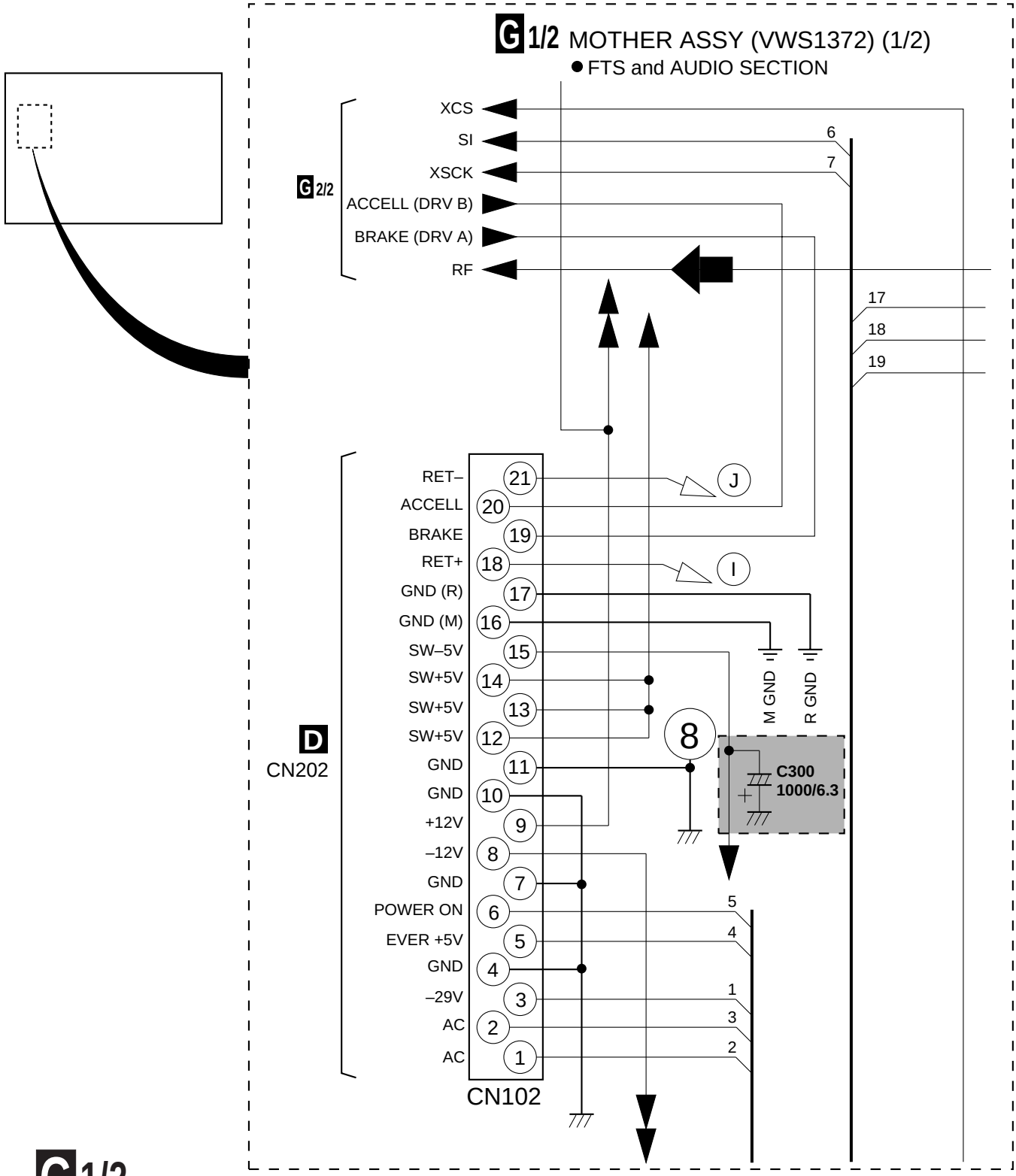

3. PCB CONNECTION DIAGRAM

NOTE FOR PCB DIAGRAMS :

1. Part numbers in PCB diagrams match those in the schematic diagrams.
2. A comparison between the main parts of PCB and schematic diagrams is shown below.

Symbol In PCB Diagrams	Symbol In Schematic Diagrams	Part Name
B C E	B C E B C E	Transistor
B C E	B C E B C E	Transistor with resistor
D G S	D G S D G S	Field effect transistor
		Resistor array
		3-terminal regulator

3. The parts mounted on this PCB include all necessary parts for several destinations.
   For further information for respective destinations, be sure to check with the schematic diagram.
4. View point of PCB diagrams.

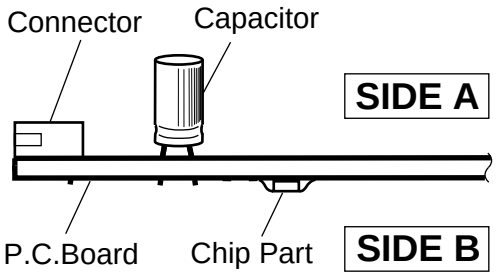

3.1 PKSB, FG and LMSB ASSEMBLIES

C LMSB ASSY

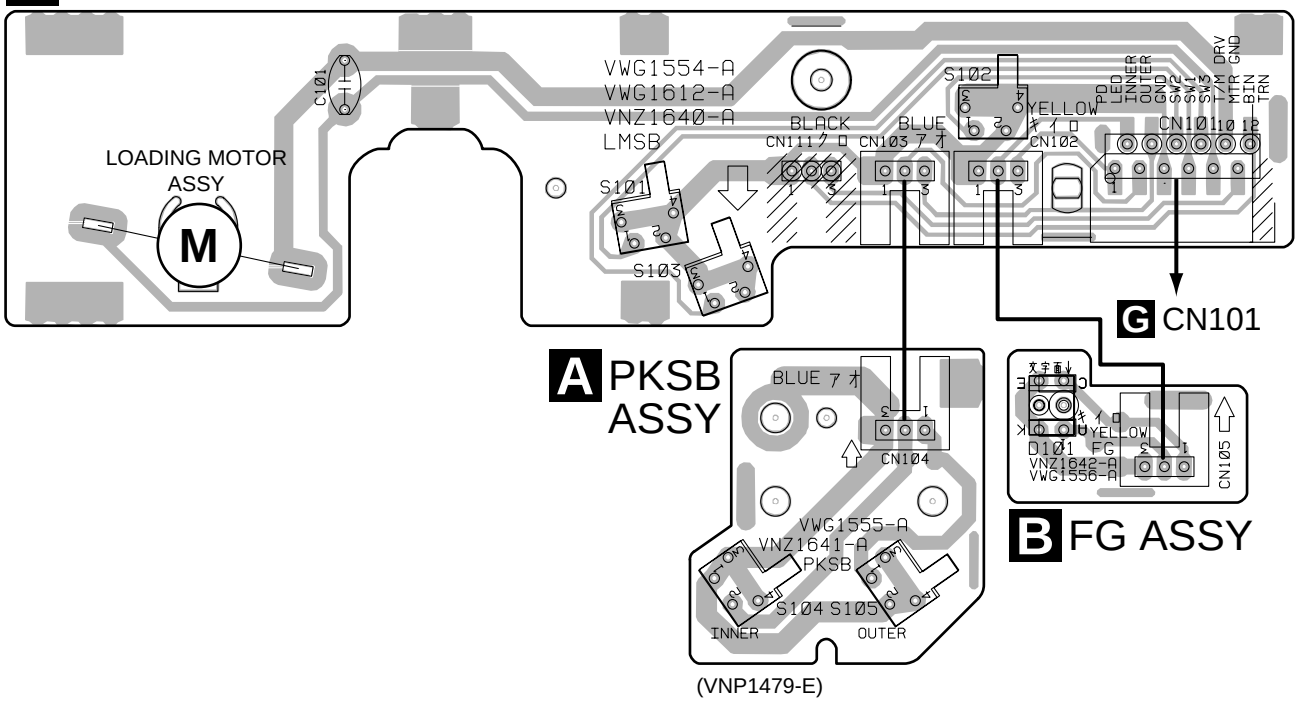

SIDE A

3.2 FLKY and KALB ASSEMBLIES

SIDE A

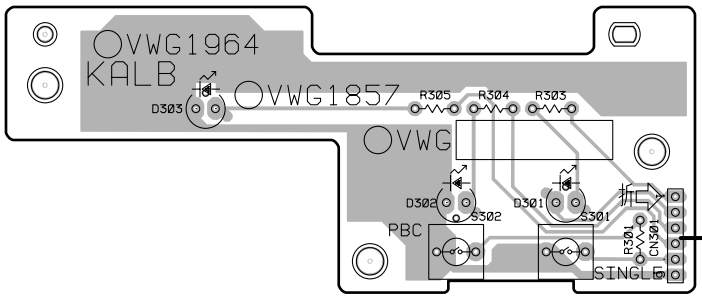

F KALB ASSY

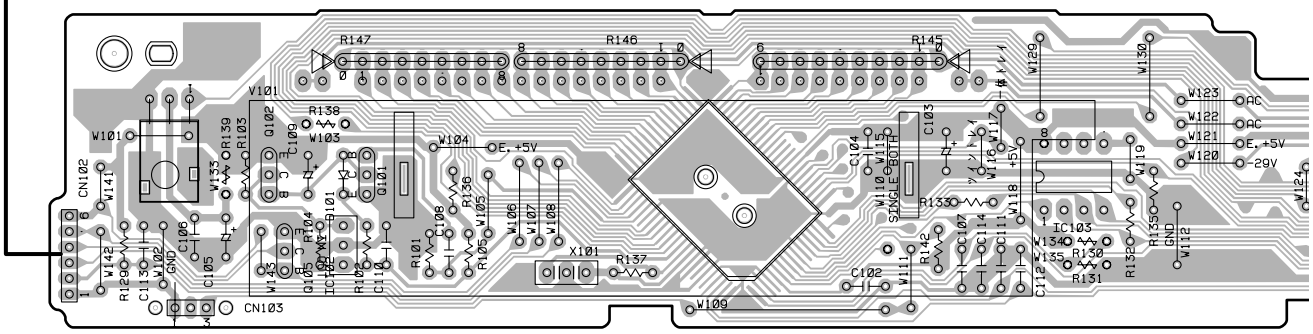

Q102 Q101
Q105 IC102

IC103

IC101

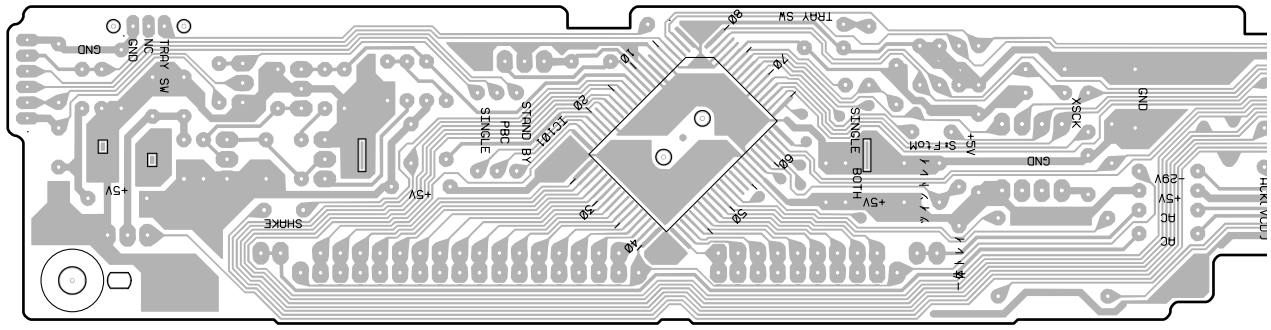

SIDE B

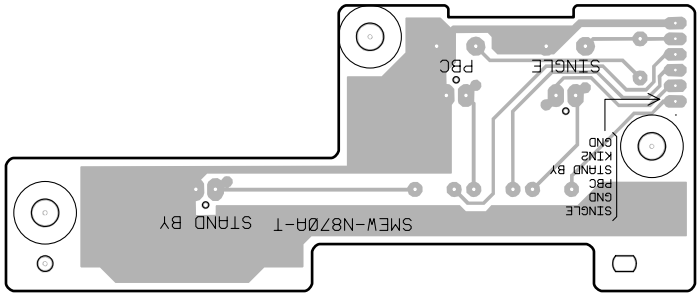

F KALB ASSY

E FLKY ASSY

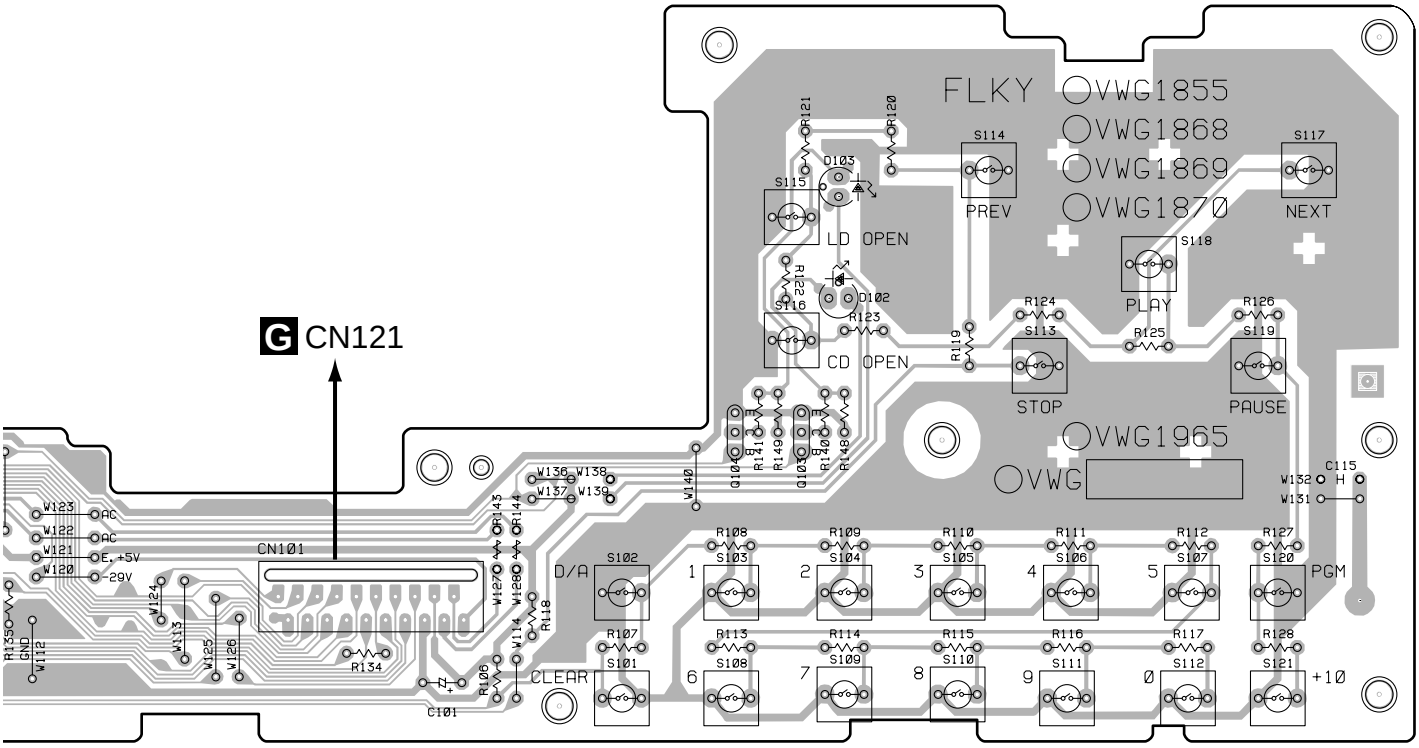

Q104 Q103

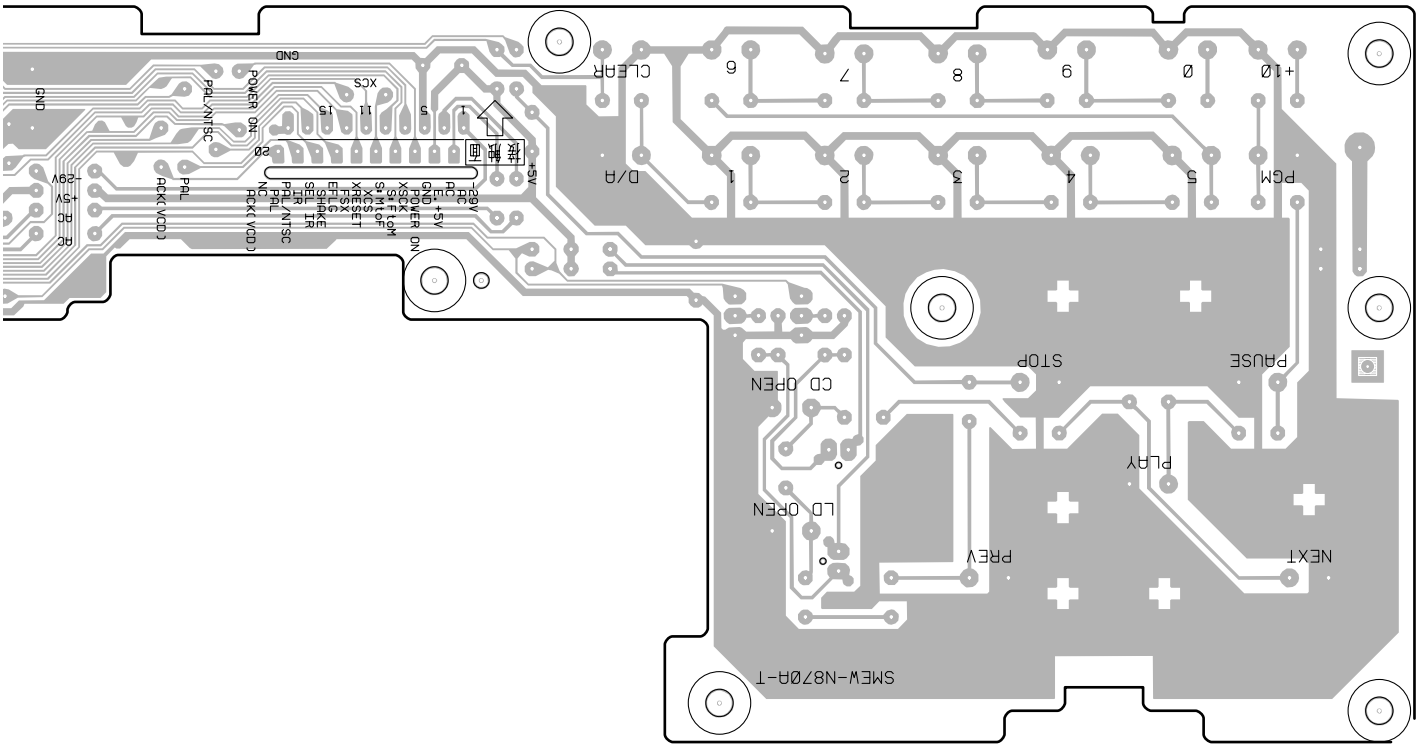

(VNP1680-A)

E FLKY ASSY

3.3 MOTHER and SCRB ASSEMBLIES

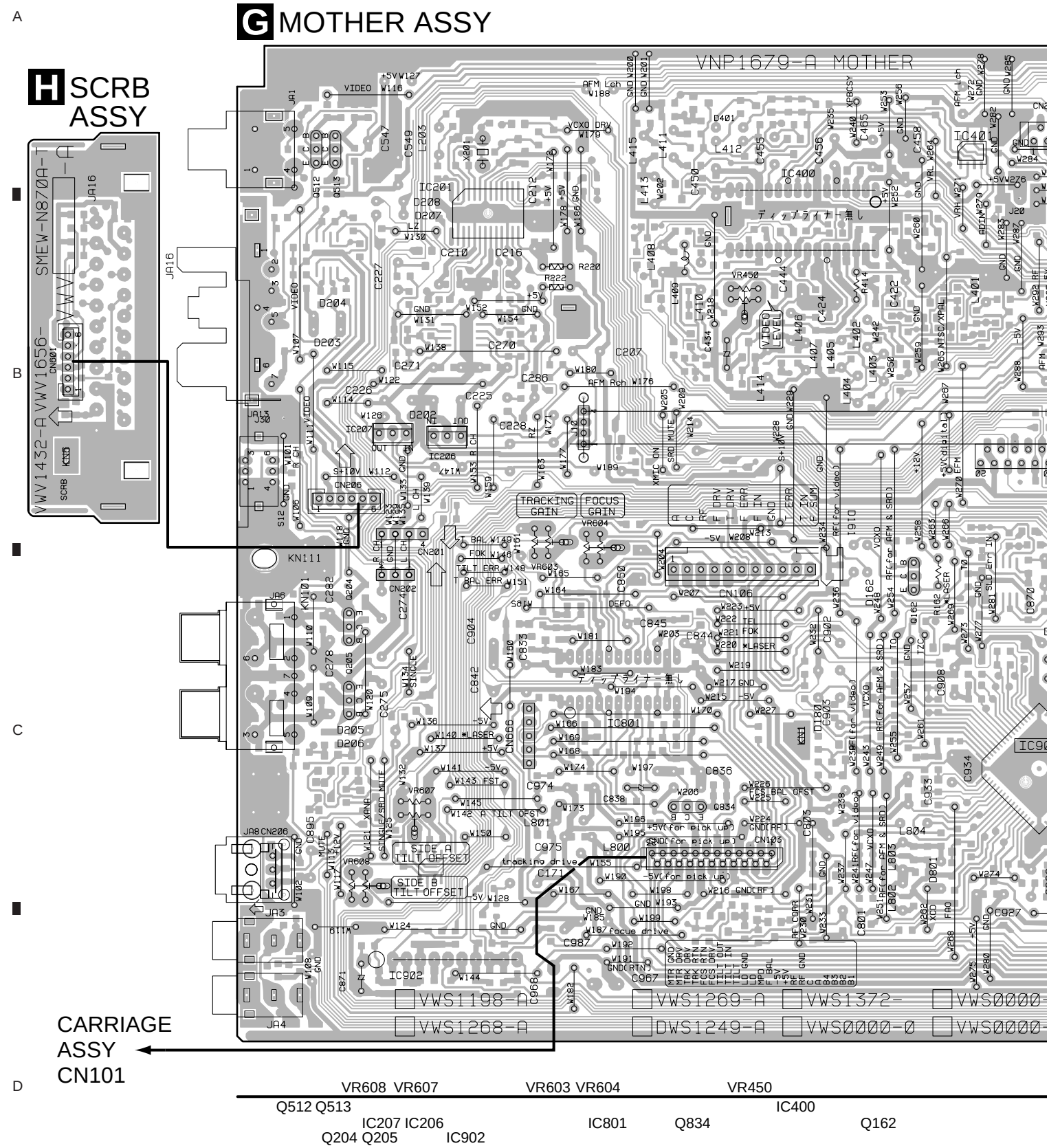

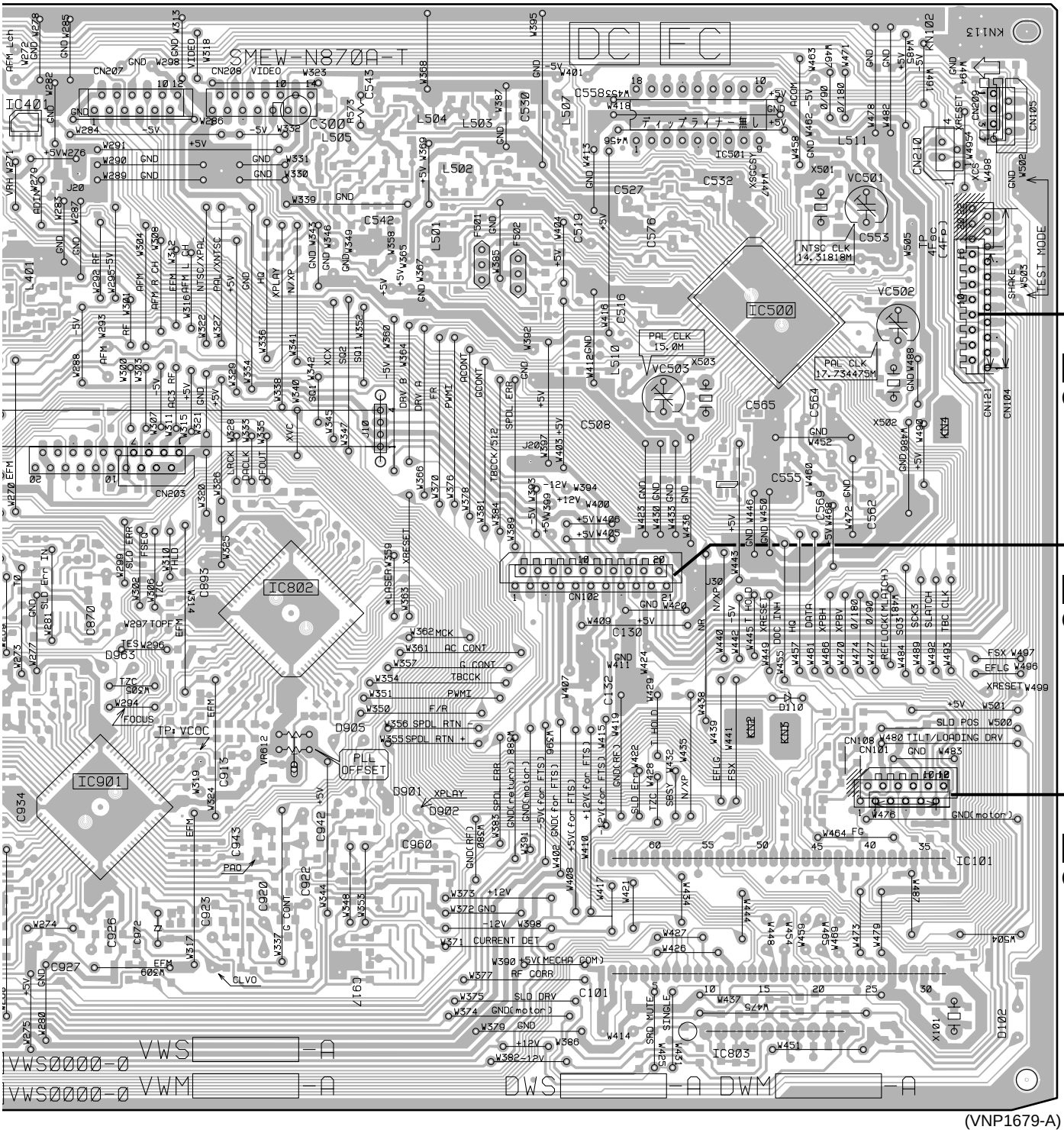

(VNP1679-A)

VR612 VC503 VC501 VC502

IC101
IC803

SIDE A

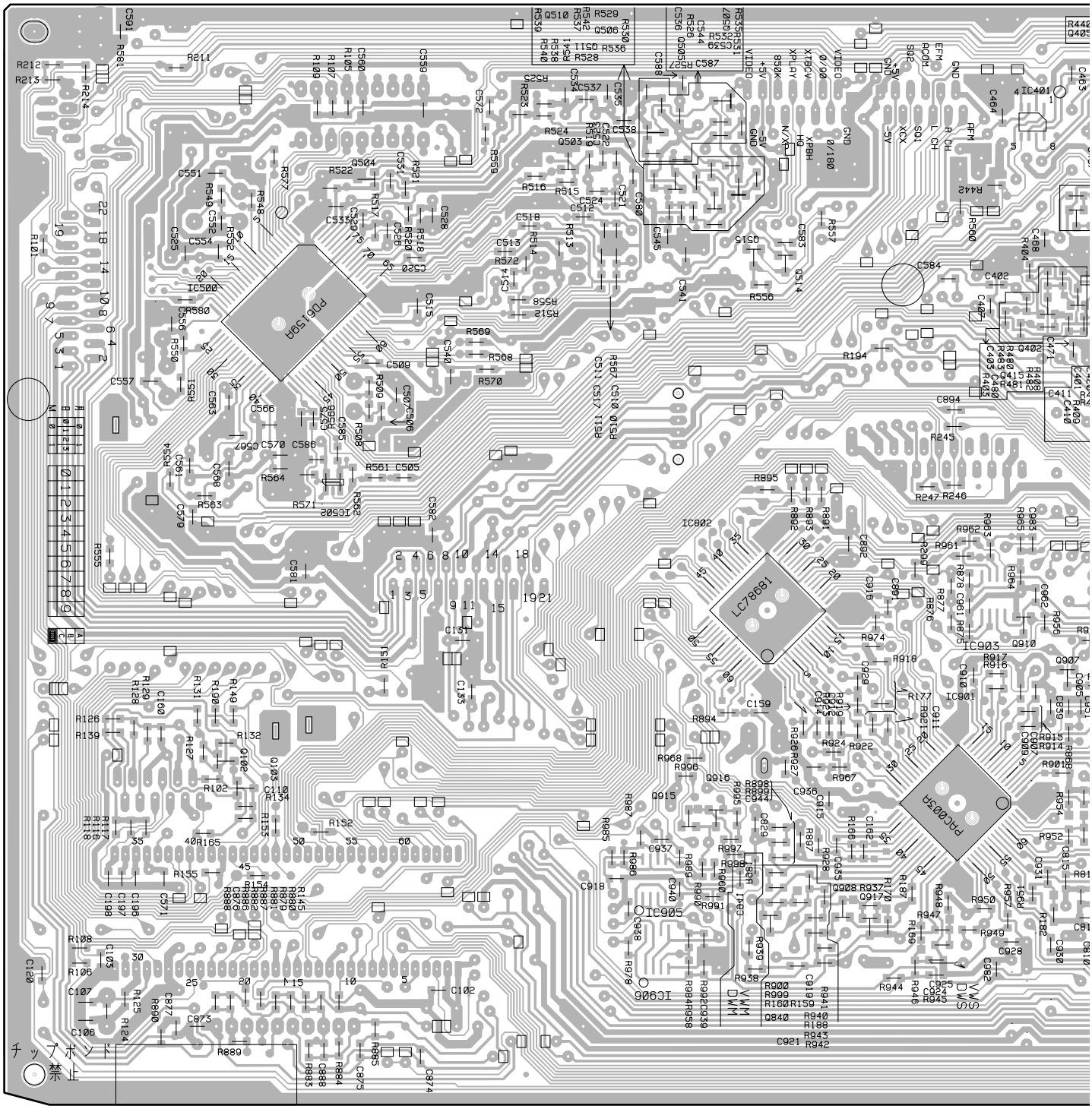

IC500 Q510 Q511 Q505-Q507 IC401 Q405
IC502 Q504 Q503 IC802 Q514 Q415 Q402 Q4
Q102 Q103 Q915 Q916 IC903 Q910 Q907
IC905 Q908 Q917 IC901 Q9
IC906 Q840

SIDE B

G MOTHER ASSY

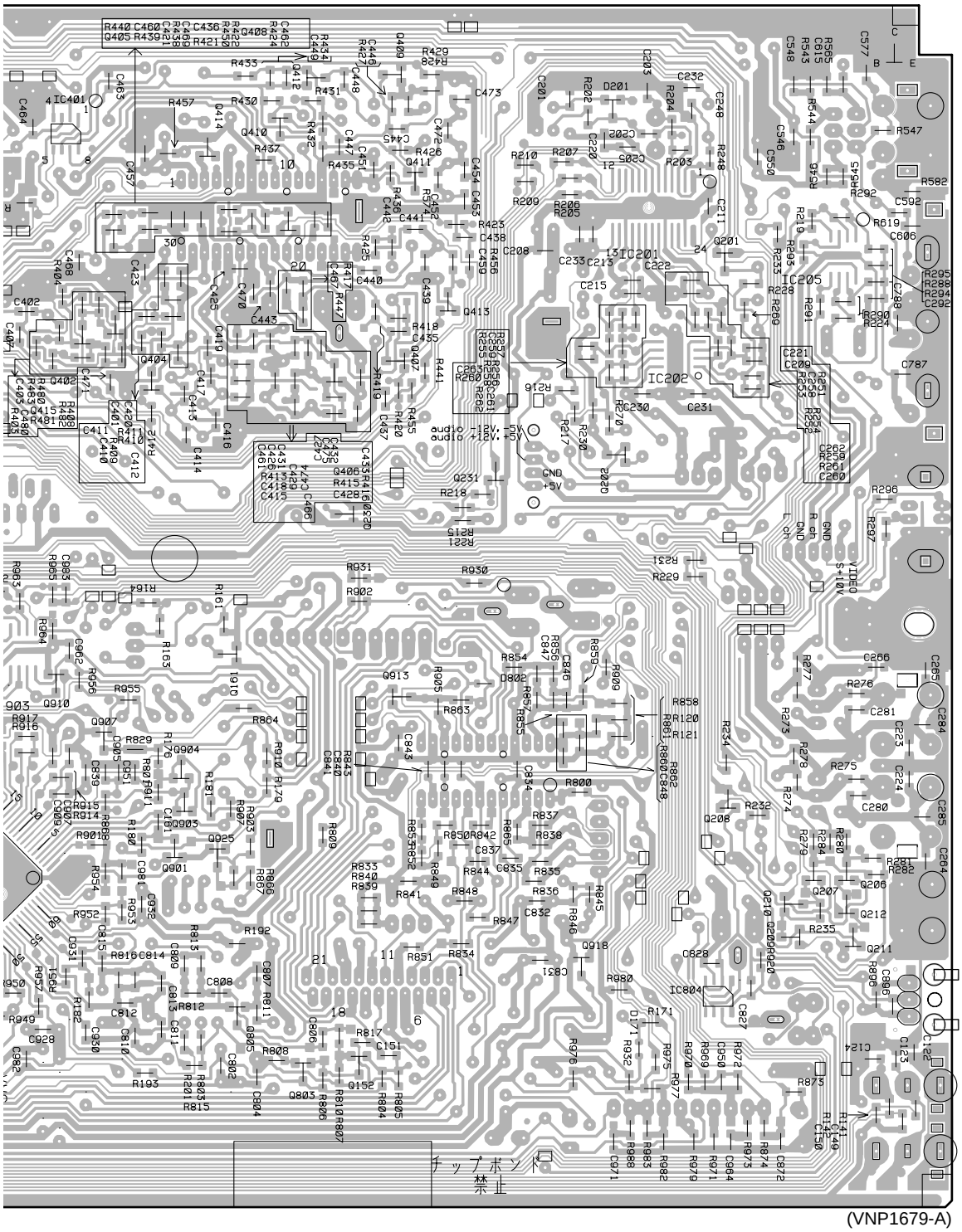

(VNP1679-A)

H SCRB ASSY

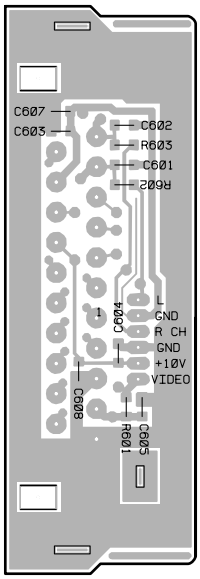

IC401 Q405 Q414 Q408-Q412
415 Q402 Q404 Q406 Q230 Q407 Q413 IC201 Q201 IC205
)3 Q910 Q907 Q904 Q161 Q913 Q231 Q202 IC202
Q901 Q903 Q925 Q918 IC804 Q206-Q212
Q805 Q803 Q152

SIDE B

3.4 SYPS ASSY

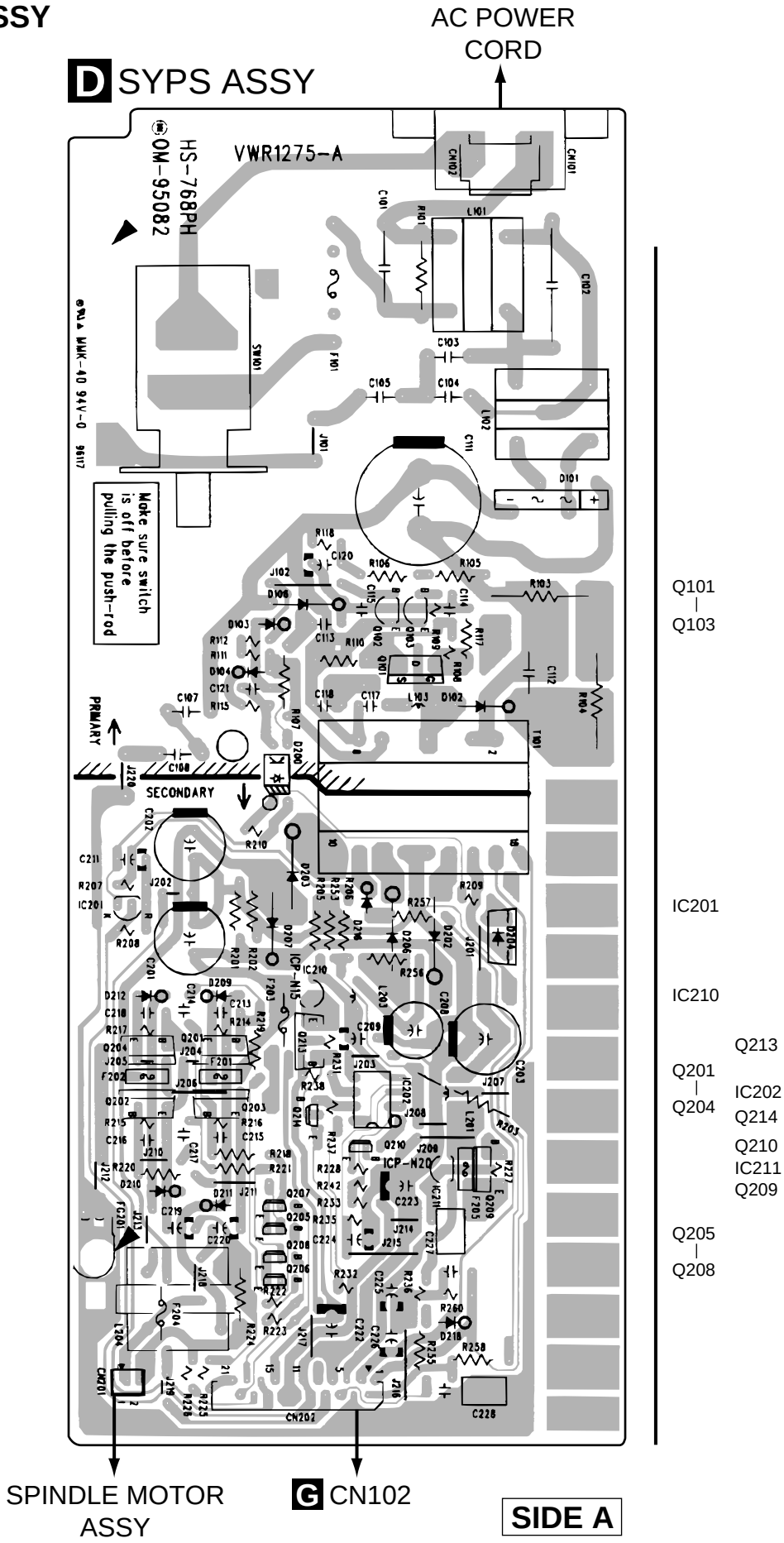
AC POWER CORD
D SYPS ASSY
VWR1275-A
HS-768PH
OM-95082
Make sure switch is off before pulling the push-rod
PRIMARY
SECONDARY
Q101
Q103
IC201
IC210
Q213
Q201
Q204
IC202
Q214
Q210
IC211
Q209
Q205
Q208
SPINDLE MOTOR ASSY
G CN102
SIDE A